VALVE SPECIFICATION SHEET

MYCOM code	Description
SLV-ME-HT-24VDC – EexdIICT4-30B	2/2 solenoid valve, Normally closed, D.C.

GENERAL:

Construction : 2/2, Normally closed
Maximum allowable pressure : 40 bar
Response time : 5 - 25 msec
Lifetime coil : 30.000 hrs
Lifetime valve, expected : 500.000 cycles, dependent upon service

CONSTRUCTION:

Body : Aluminum, anodized
Core tube : Stainless steel, AISI type 304
Core and plugnut : Stainless steel, AISI type 430F
Springs : Stainless steel, AISI type 302
Seat : Stainless steel, AISI type 303
Sealing : PTFE
Disc : PTFE
Shading coil : None
Coil insulation class : H (180°C)
Power consumption : 16.8 Watt
Enclosure : Flameproof / dust- / watertight IP-67
Electrical connections : Screw terminal
Pipe connections : 3/8" Rc (BSPT)
P.E.D. (97/23/EC) category. : S.E.P. , Article 3.3

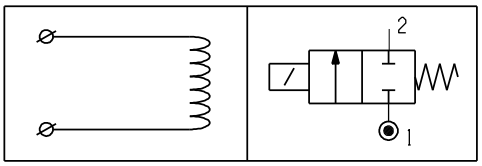

Electrical Schematic ISO-symbol

Fluids	Temperature ranges
Light oil / NH3 / Freon	-20 to +100°C

Ambient temperature ranges
-20 to +75°C

Approval:

Explosion proof solenoid to ATEX directive 94/009/EC & IECEX standards:
IEC-EN 60079-0/-1 & IEC-EN 61241-0/-1.
(flameproof & dust-tight).
EC-type examination certificate:
LCIE 00ATEX 6008X.
IECEX LCI 07.0015X.

ATEX code:

II 2 G Ex d IIC/ II 2D ExtD A21
T4 / T135°C

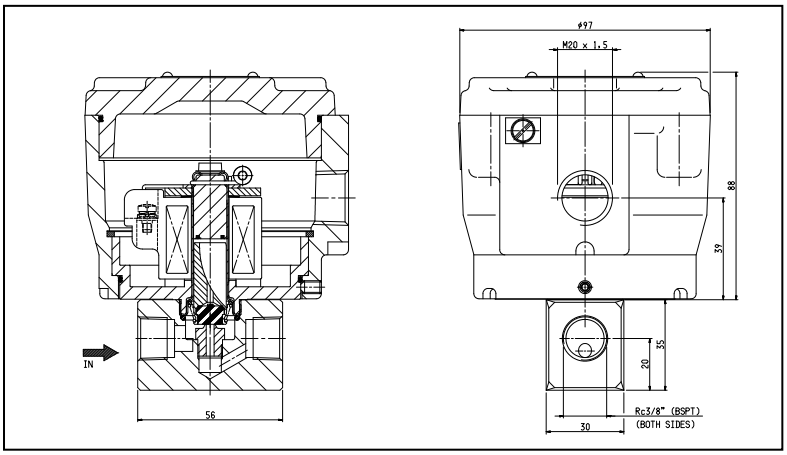

PRODUCTS:

Pipe size	Orifice size	Flow coefficient Kv		Operating pressure differential (bar)		Coil type	Catalogue number
				min.	maximum		
Rc	(mm)	(m^3/h)	(l/min)			=	PTFE sealing
3/8	2,0	0,11	1,8	0	30	(D.C.) M12	SLV-ME-HT-24VDC-EexdIICT4-30B