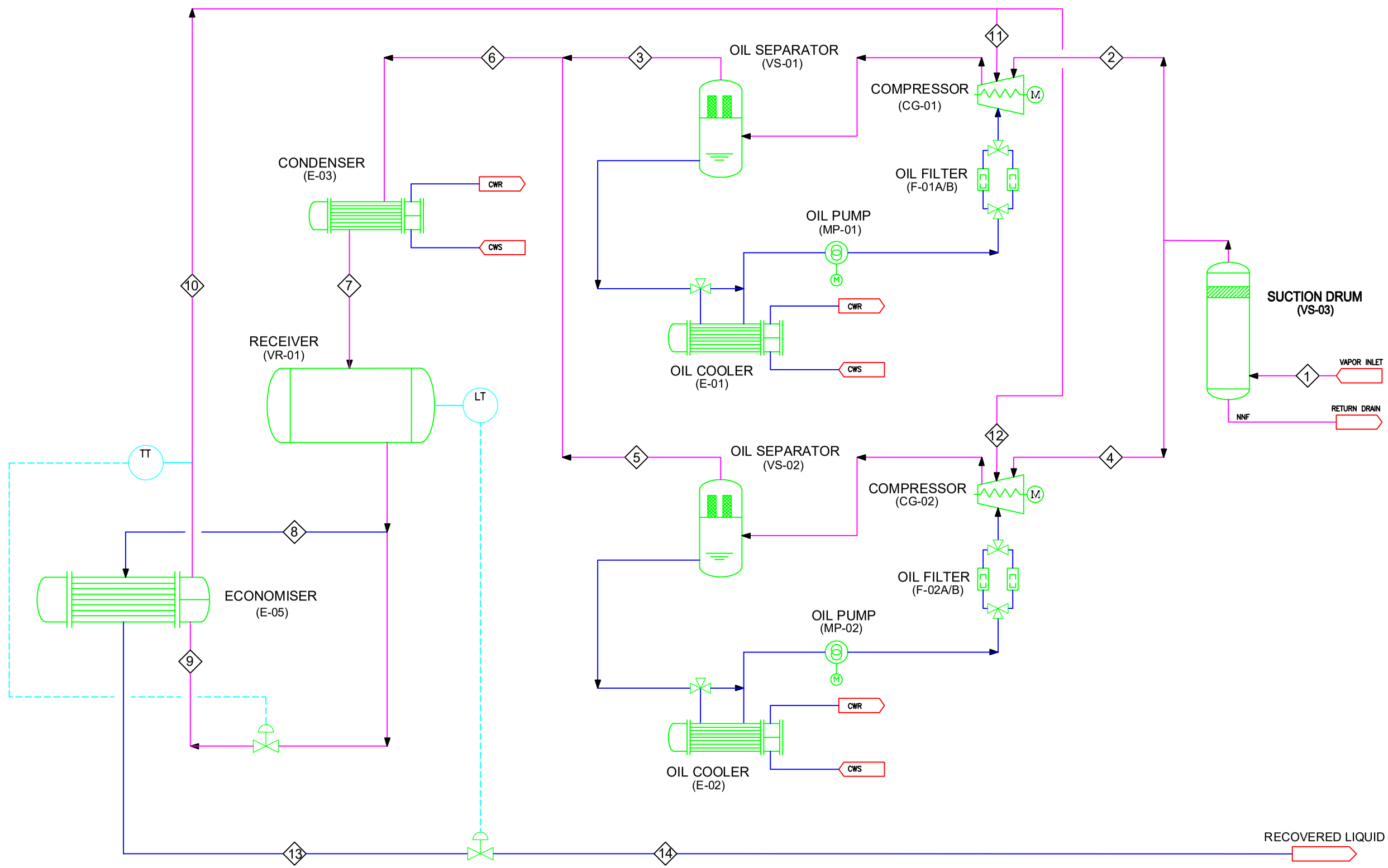

NORMAL OPERATIG, TS = -36.5C

		1	2	3	4	5	6	7	8	9	10	11	12	13	14
TEMP.	°C	-36.50	-36.50	84.00	-36.50	84.00	84.00	41.28	41.28	-8.83	-8.98	-8.99	-8.99	-3.66	-36.65
PRESS.	barA	1.05	1.05	16.47	1.05	16.47	16.13	16.08	16.08	3.05	3.03	3.03	3.03	15.62	0.86
MASS FLOW	kg/h	1164.00	582.00	679.00	582.00	679.00	1358.00	1358.00	1164.00	194.00	194.00	97.00	97.00	1164.00	1164.00
DENSITY	kg/m3	0.76	0.76	10.38	0.76	10.38	10.16	576.26	576.26	2.43 / 649.6	2.43	2.43	2.43	642.6	0.908 / 680.5
V.F.	-	1.00	1.00	1.00	1.00	1.00	1.00	0.00	0.00	0.193	1.00	1.00	1.00	0.00	0.1403

NOTES

– PRESSURE CONTROLLER OUTPUT SIGNAL WILL BE SENT TO REFRIGERATION PACKAGE BY CLIENT TO CONTROL COMPRESSOR LOADING AS TO MAINTAIN PRESSURE OF AMMONIA STORAGE TANK CONSTANT.

LEGEND

REFERENCE DRAWINGS	DWG. No.
--	--

VENDOR:

VENDOR DOC. NO.:

Rev.	Date	Class	Purpose of Issue	Prepared by	Checked by	Approved by
02	7/13/2024	IFA	ISSUED FOR APPROVAL	A.K.	M.O.	A.M.
01	5/25/2024	IFA	ISSUED FOR APPROVAL	A.K.	M.O.	A.M.
00		IFA	ISSUED FOR APPROVAL	A.K.	M.O.	A.M.

OWNER:

PROJECT:

CONTRACTOR:

DRAWING TITLE:

PROCESS FLOW DIAGRAM

SATURATED STREAM

Rev.	Size.	Scale.	Sheet No.
02	A3	NTS	1 OF 1