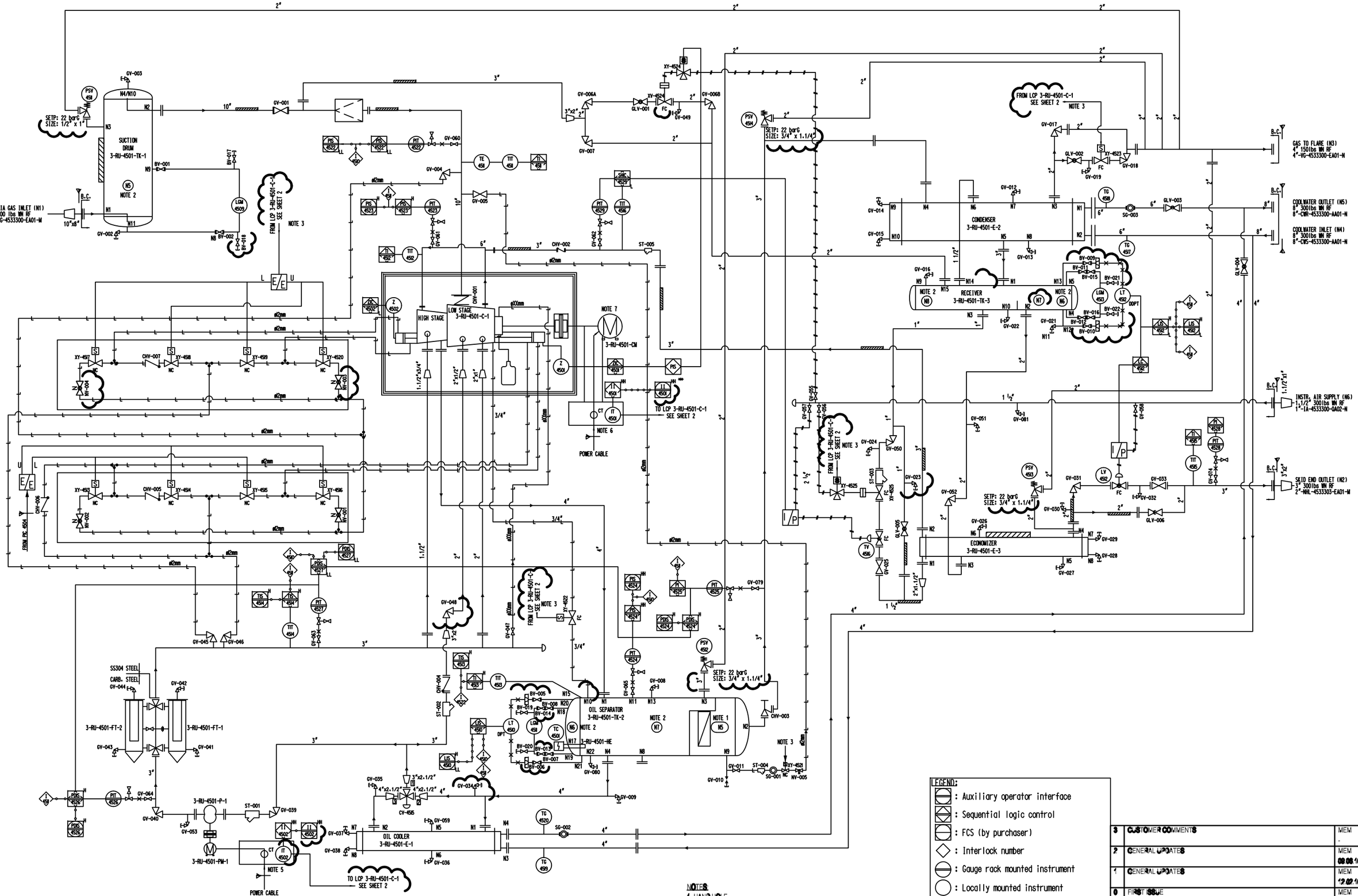

3-RU-4501-P-1	OIL PUMP	GEAR PUMP	M80P				
3-RU-4501-E-1	OIL COOLER	SHELL & TUBE	CI2-EP-8II-L2600	3-RU-4501-E-3	ECONOMIZER	SHELL & TUBE	EA-08084-9I0
3-RU-4501-HE	OIL HEATER	IMMERGED	HEA-2000W-230	3-RU-4501-TK-3	RECEIVER	HORIZONTAL	LR-6050S
3-RU-4501-TK-2	OIL SEPARATOR	HORIZONTAL	HSI004I-30CS	3-RU-4501-E-2	CONDENSER	SHELL & TUBE	CA-I8I68-200
3-RU-4501-CM-1	MAIN MOTOR	HIGH VOLTAGE	HXR 400LG2	3-RU-4501-FT-2	OIL FILTER 2	VERTICAL	IDGL2-620-2*
3-RU-4501-C-1	COMPRESSOR	OIL INJ. SCREW	N2520LLC	3-RU-4501-FT-1	OIL FILTER 1		
3-RU-4501-TK-1	SUCTION DRUM	VERTICAL	SD-7026S	3-RU-4501-PM-1	OIL PUMP MOT.	LOW VOLTAGE	M2AA 132S
ITEM CODE	FUNCTION	TYPE	DESIGNATION	ITEM CODE	FUNCTION	TYPE	DESIGNATION