RECIPOCRATING COMPRESSOR DETAIL DRAWING WITH PARTS LIST FOR NITROGEN GAS BOOSTER

Rev.	Date	Purpose of Issue	Prepared	Checked	Approved	AC Code
05	07/11/2022	Approved for Construction	MC	KP	JR	
04	13/09/2022	Approved for Construction	MC	KP	JR	
03	05/09/2022	Approved for Construction	MC	KP	JR	
02	17/08/2022	Approved for Construction	MC	KP	JR	
01	21/07/2022	For information	MC	KP	JR	
00	18/11/2021	For information	MC	KP	JR	

Class: 1 | Phase: P

This document with all its rights is the property of B.U.P.C. and must be held in confidence. No disclosure, reproduction or other use of the document in whole or a position is to be made without the prior consent of B.U.P.C.

TABULATION OF REVISED PAGES

Page	D00	D01	D02	D03	D04
1.	X	X	X	X	X
2.	X	X	X	X	X
3.	X				
4.	X				
5.	X				
6.	X				
7.	X				
8.	X				
9.	X				
10.	X				
11.	X				
12.	X				
13.	X				
14.	X				
15.	X				
16.	X				
17.	X				
18.	X				
19.	X				
20.	X				
21.	X				
22.	X				
23.	X				
24.	X				
25.	X				
26.	X				
27.	X				
28.	X				
29.	X				
30.	X				
31.	X				
32.	X				
33.					
34.					

Page	D05				
1	X				
2	X				

This document with all its rights is the property of B.U.P.C. and must be held in confidence. No disclosure, reproduction or other use of the document in whole or a position is to be made without the prior consent of B.U.P.C.

XXXXXXXX

ITEM TAG NO.	PART NO.	DESCRIPTION	QTY
		Drawing CC0802 Gear	
10	17811-CC0818	Crankcase	1
20	17811-CC0819	Crankshaft	1
30	17811-CC0820	Connecting rod	2
40	17811-CC0821	Guide piston	2
50	17811-CC0822	Gland oil	2
60	17811-CC0823	Lubrication	1
70	17811-CC0824	V-belt pulley	1
80	17811-CC0825	Oil	13,5

Drawing CC0803 Crankcase

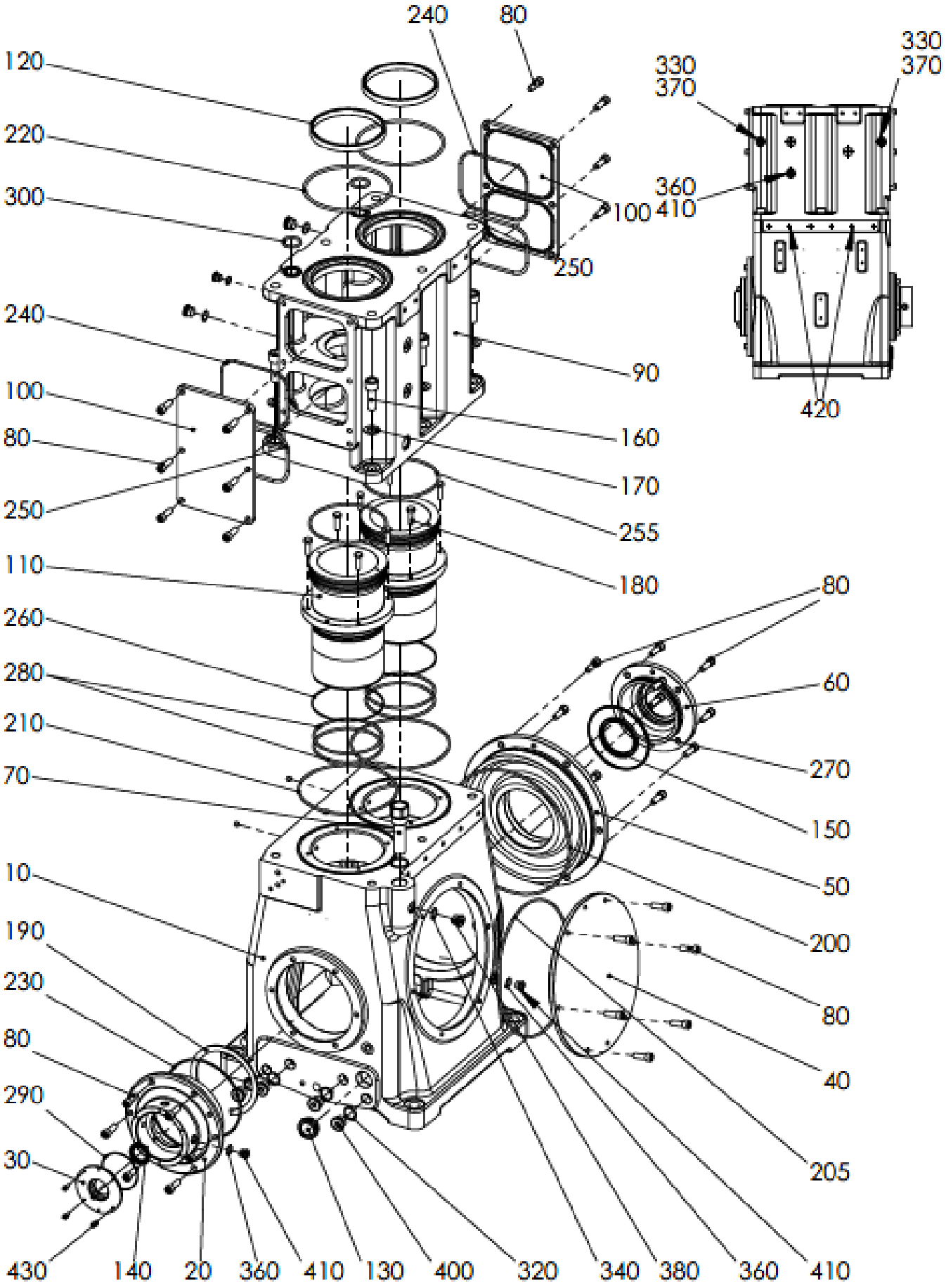

ITEM TAG NO.	PART NO.	DESCRIPTION	QTY
		Drawing CC0803 Crankcase	
10	17811-CC0826	Crankcase	1
20	17811-CC0827	Bearing cap	1
30	17811-CC0828	Cover	1
40	17811-CC0829	Side cover	1
50	17811-CC0830	Bearing cap	1
60	17811-CC0831	Cover	1
70	17811-CC0832	Connection piece	1
80	17811-CC0833	Hexagon socket h.c. screw	34
90	17811-CC0834	Lantern	1
100	17811-CC0835	Side cover	2
110	17811-CC0836	Liner	2
120	17811-CC0837	Ring	2
130	17811-CC0838	Oil inspection glass	1
140	17811-CC0839	Radial oil seal gasket	1
150	17811-CC0840	Radial oil seal gasket	1
160	17811-CC0841	Hexagon socket h.c. screw	6
170	17811-CC0842	Washer	6
180	17811-CC0843	Hexagon screw	8
190	17811-CC0844	Circlip	1
200	17811-CC0845	O-ring	1
205	17811-CC0846	O-ring	1
210	17811-CC0847	O-ring	2
220	17811-CC0848	O-ring	2
230	17811-CC0849	O-ring	1
240	17811-CC0850	O-ring	2
250	17811-CC0851	O-ring	2
255	17811-CC0852	O-ring	2
260	17811-CC0853	O-ring	2
270	17811-CC0854	O-ring	1
280	17811-CC0855	O-ring	4
290	17811-CC0856	O-ring	1
300	17811-CC0857	O-ring	2
320	17811-CC0858	Sealing ring	4
330	17811-CC0859	Sealing ring	2
340	17811-CC0860	Sealing ring	1
360	17811-CC0861	Sealing ring	3
370	17811-CC0862	Plug	2
380	17811-CC0863	Plug	1
400	17811-CC0864	Screw plug	4
410	17811-CC0865	Screw plug	3
420	17811-CC0866	Plug	2
430	17811-CC0867	Hexagon socket h.c. screw	4

Drawing CC0804 Crankshaft

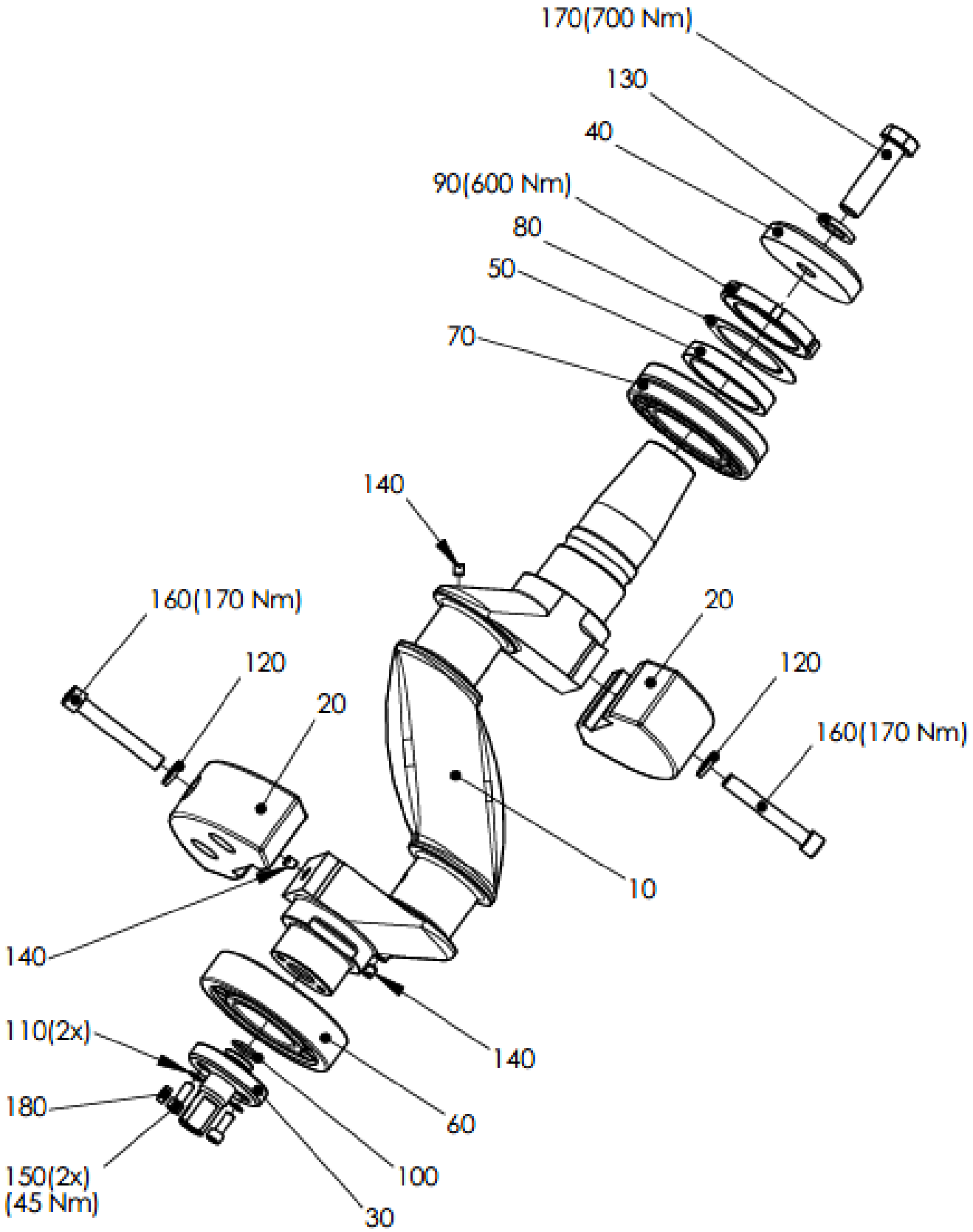

ITEM TAG NO.	PART NO.	DESCRIPTION	QTY
		Drawing CC0804 Crankshaft	
10	17811-CC0868	Crankshaft	1
20	17811-CC0869	Counter balance	2
30	17811-CC0870	Washer	1
40	17811-CC0871	Washer	1
50	17811-CC0872	Distance ring	1
60	17811-CC0873	Roller bearing	1
70	17811-CC0874	Self-aligning roller bearing	1
80	17811-CC0875	Tab washer	1
90	17811-CC0876	Groove nut	1
100	17811-CC0877	O-ring	1
110	17811-CC0878	Lock plate	2
120	17811-CC0879	Lock plate	2
130	17811-CC0880	Lock plate	1
140	17811-CC0881	Set screw	3
150	17811-CC0882	Hexagon socket h.c. screw	2
160	17811-CC0883	Hexagon socket h.c. screw	2
170	17811-CC0884	Hexagon screw	1
180	17811-CC0885	Feather key	1

Drawing CC0805 Guide piston

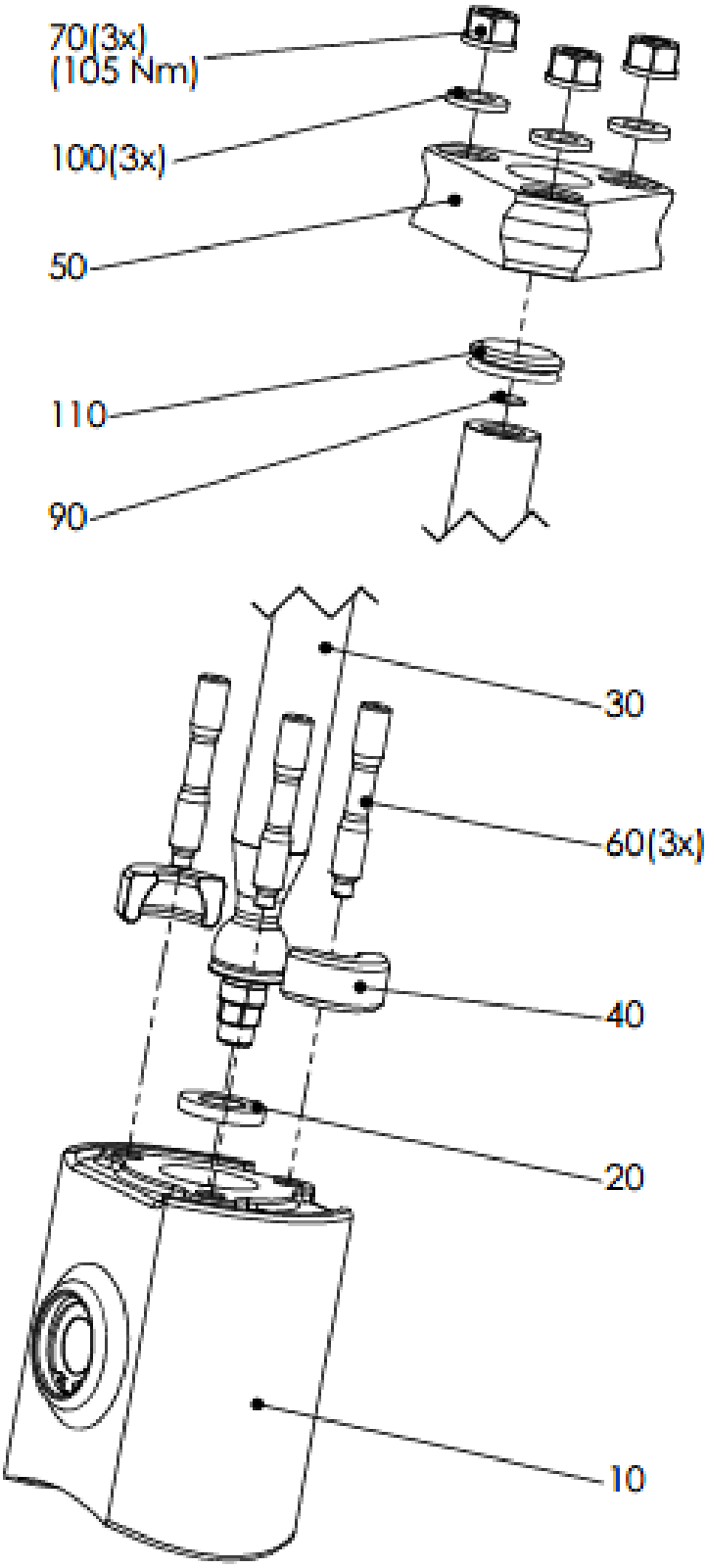

ITEM TAG NO.	PART NO.	DESCRIPTION	QTY
		Drawing CC0805 Guide piston	
10	17811-CC0886	Guide piston	1
20	17811-CC0887	Pressure washer	1
30	17811-CC0888	Piston rod	1
40	17811-CC0889	Ring	1
50	17811-CC0890	Ring	1
60	17811-CC0891	Screw	3
70	17811-CC0892	Nut	3
90	17811-CC0893	Washer	1
100	17811-CC0894	Lock plate	3
110	17811-CC0895	V-Ring	1

Drawing CC0806 Gland, oil

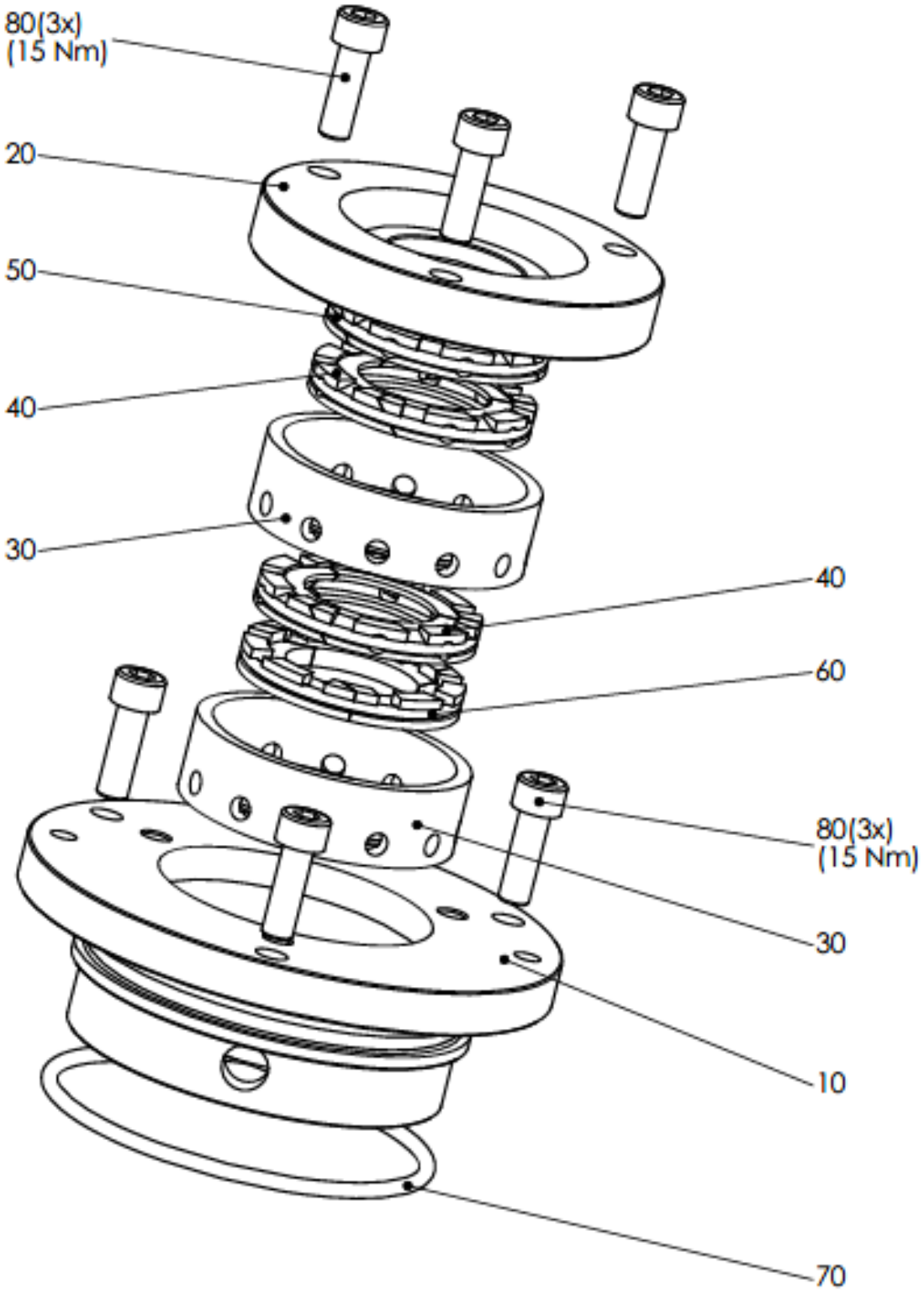

ITEM TAG NO.	PART NO.	DESCRIPTION	QTY
		Drawing CC0806 Gland oil	
10	17811-CC0896	Gland housing	1
20	17811-CC0897	Cover	1
30	17811-CC0898	Gland chamber	2
40	17811-CC0899	Oil scraper ring	2
50	17811-CC0900	Oil scraper ring	1
60	17811-CC0901	Oil scraper ring	1
70	17811-CC0902	O-ring	1
80	17811-CC0903	Hexagon socket h.c. screw	6

Drawing CC0807 Lubrication

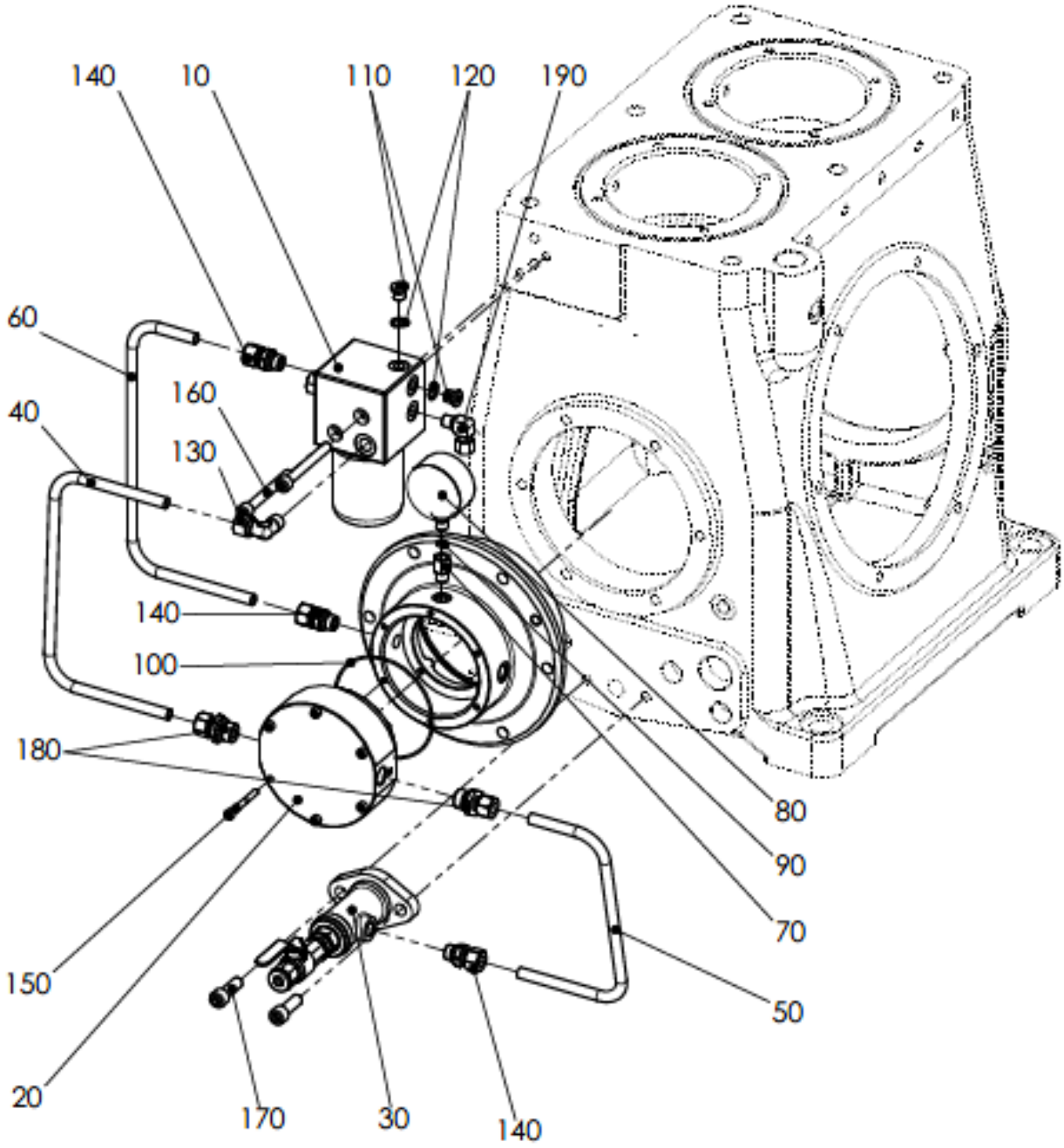

ITEM TAG NO.	PART NO.	DESCRIPTION	QTY
		Drawing CC0807 Lubrication	
10	17811-CC0904	Pressure regulator	1
20	17811-CC0905	Pump	1
30	17811-CC0906	Filter	1
40	17811-CC0907	Pipeline	1
50	17811-CC0908	Pipeline	1
60	17811-CC0909	Pipeline	1
70	17811-CC0910	Socket	1
80	17811-CC0911	Manometer	1
90	17811-CC0912	Sealing ring	1
100	17811-CC0913	O-ring	1
110	17811-CC0914	Screw plug	2
120	17811-CC0915	Sealing ring	2
130	17811-CC0916	Angular threaded joint	1
140	17811-CC0917	Straight screw connection	3
150	17811-CC0918	Hexagon socket h.c. screw	6
160	17811-CC0919	Hexagon socket h.c. screw	2
170	17811-CC0920	Hexagon socket h.c. screw	2
180	17811-CC0921	Straight screw connection	2
190	17811-CC0922	Angular threaded joint	1

Drawing CC0808 Pressure regulator

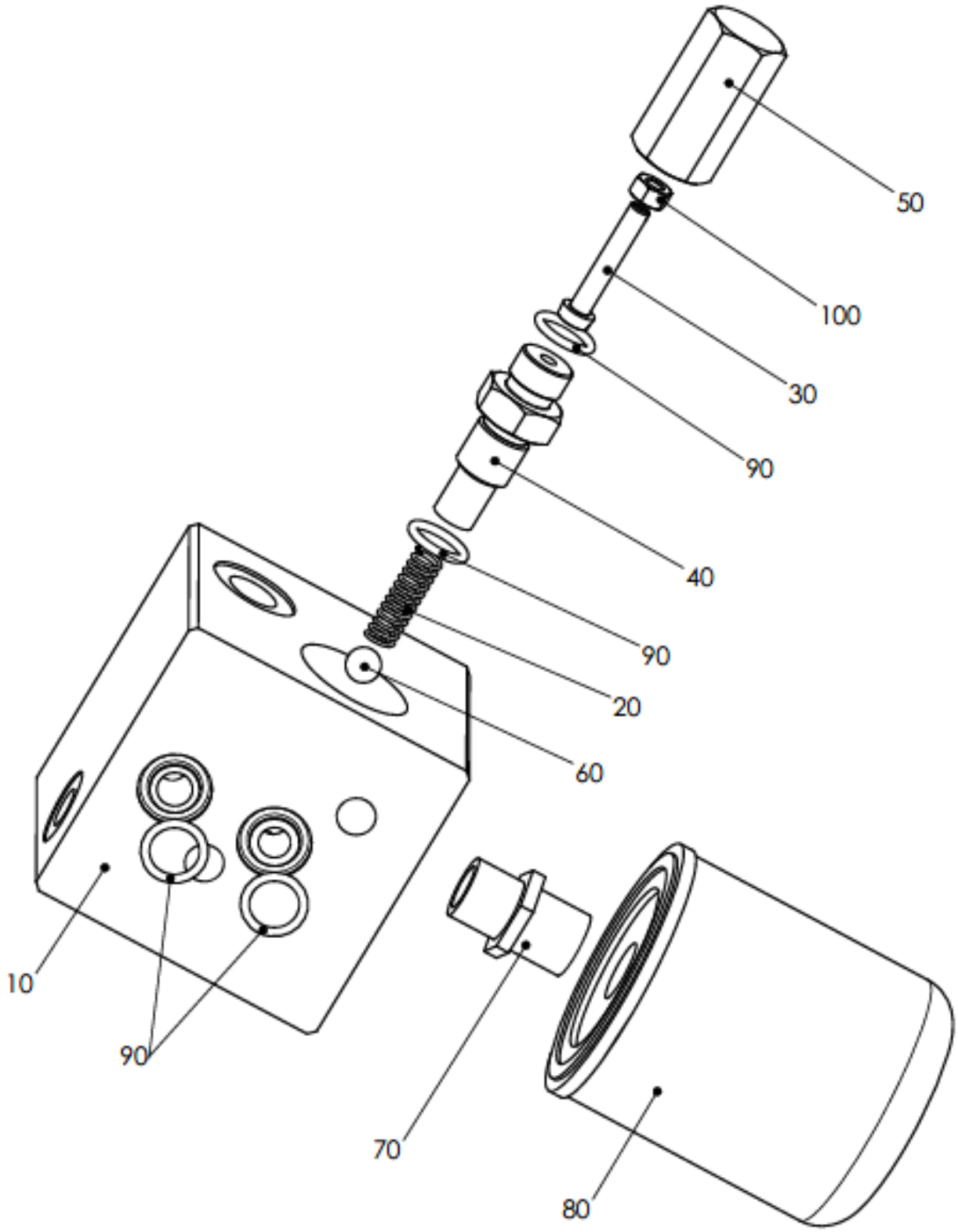

ITEM TAG NO.	***PART NO.***	***DESCRIPTION***	***QTY***
		Drawing CC0808 Pressure regulator	
10	17811-CC0923	Distributor	1
20	17811-CC0924	Pressure spring	1
30	17811-CC0925	Adjusting screw	1
40	17811-CC0926	Valve guide	1
50	17811-CC0927	Cap nut	1
60	17811-CC0928	Ball	1
70	17811-CC0929	Nipple	1
80	17811-CC0930	Filter element	1
90	17811-CC0931	O-ring	4
100	17811-CC0932	Hexagon nut	1

Drawing CC0809 Cylinder

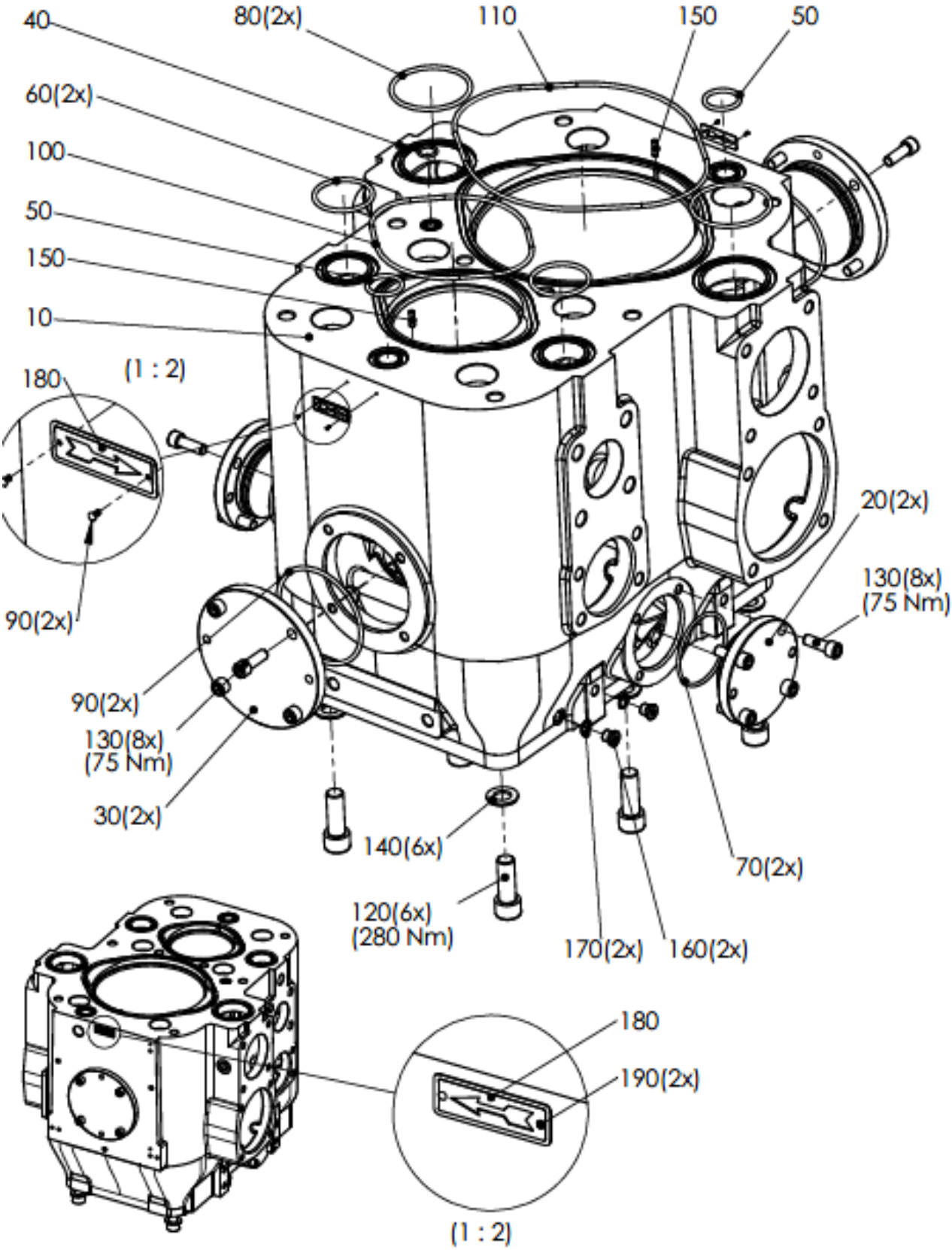

ITEM TAG NO.	PART NO.	DESCRIPTION	QTY
		Drawing CC0809 Cylinder	
10	17811-CC0933	Cylinder	1
20	17811-CC0934	Cover	2
30	17811-CC0935	Side cover	2
40	17811-CC0936	O-ring	1
50	17811-CC0937	O-ring	2
60	17811-CC0938	O-ring	2
70	17811-CC0939	O-ring	2
80	17811-CC0940	O-ring	2
90	17811-CC0941	O-ring	2
100	17811-CC0942	O-ring	1
110	17811-CC0943	O-ring	1
120	17811-CC0944	Hexagon socket h.c. screw	6
130	17811-CC0945	Hexagon socket h.c. screw	16
140	17811-CC0946	Washer	6
150	17811-CC0947	Straight pin	2
160	17811-CC0948	Screw plug	2
170	17811-CC0949	Sealing ring	2
180	17811-CC0950	Plate	2
190	17811-CC0951	Round head bolt	4

Drawing CC0810 Cylinder head

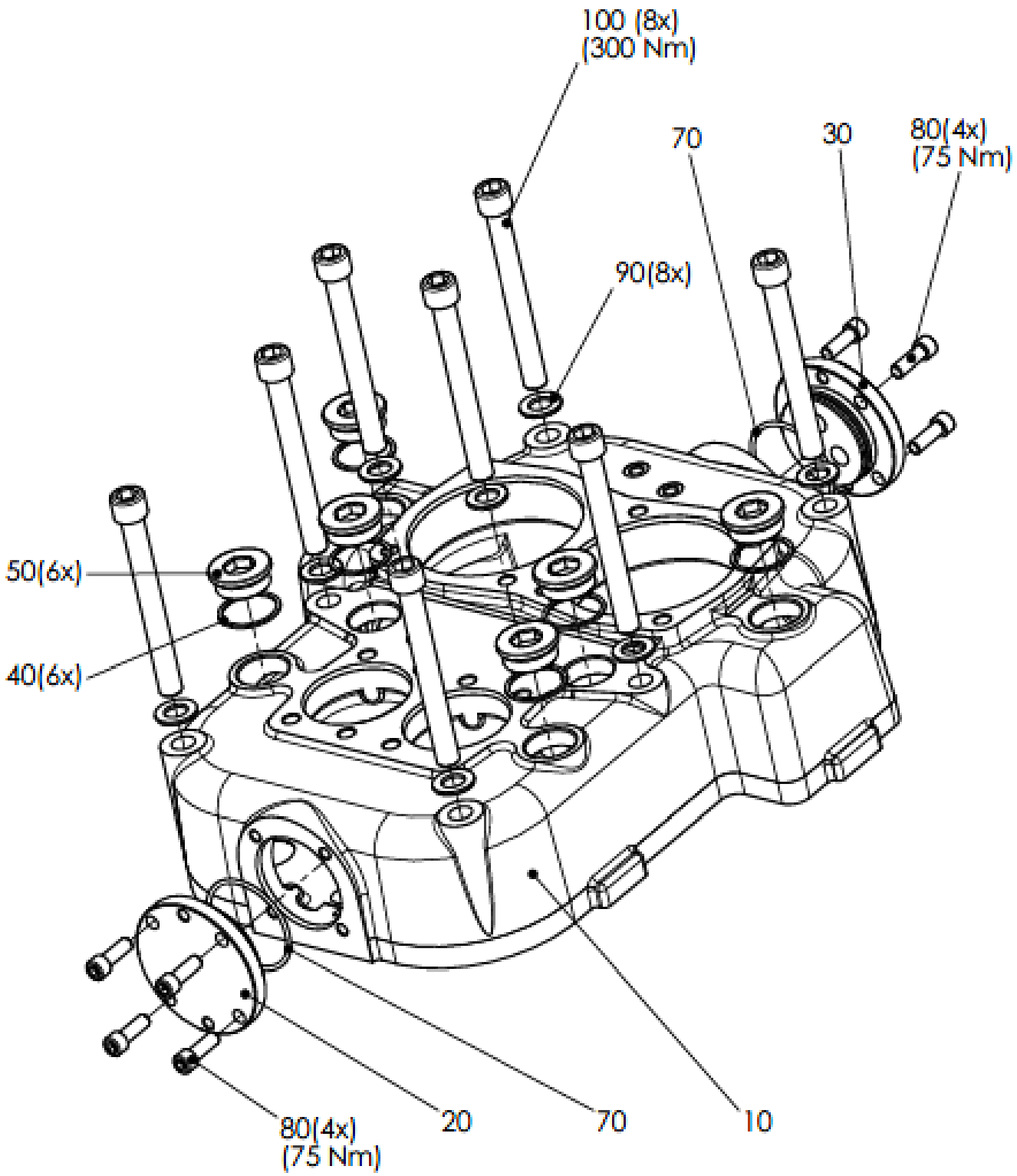

ITEM TAG NO.	PART NO.	DESCRIPTION	QTY
		Drawing CC0810 Cylinder head	
10	17811-CC0952	Cylinder head	1
20	17811-CC0953	Cover	1
30	17811-CC0954	Cover	1
40	17811-CC0955	Sealing ring	6
50	17811-CC0956	Screw plug	6
70	17811-CC0957	O-ring	2
80	17811-CC0958	Hexagon socket h.c. screw	8
90	17811-CC0959	Washer	8
100	17811-CC0960	Hexagon socket h.c. screw	8

Drawing CC0811 Delivery valve fastening

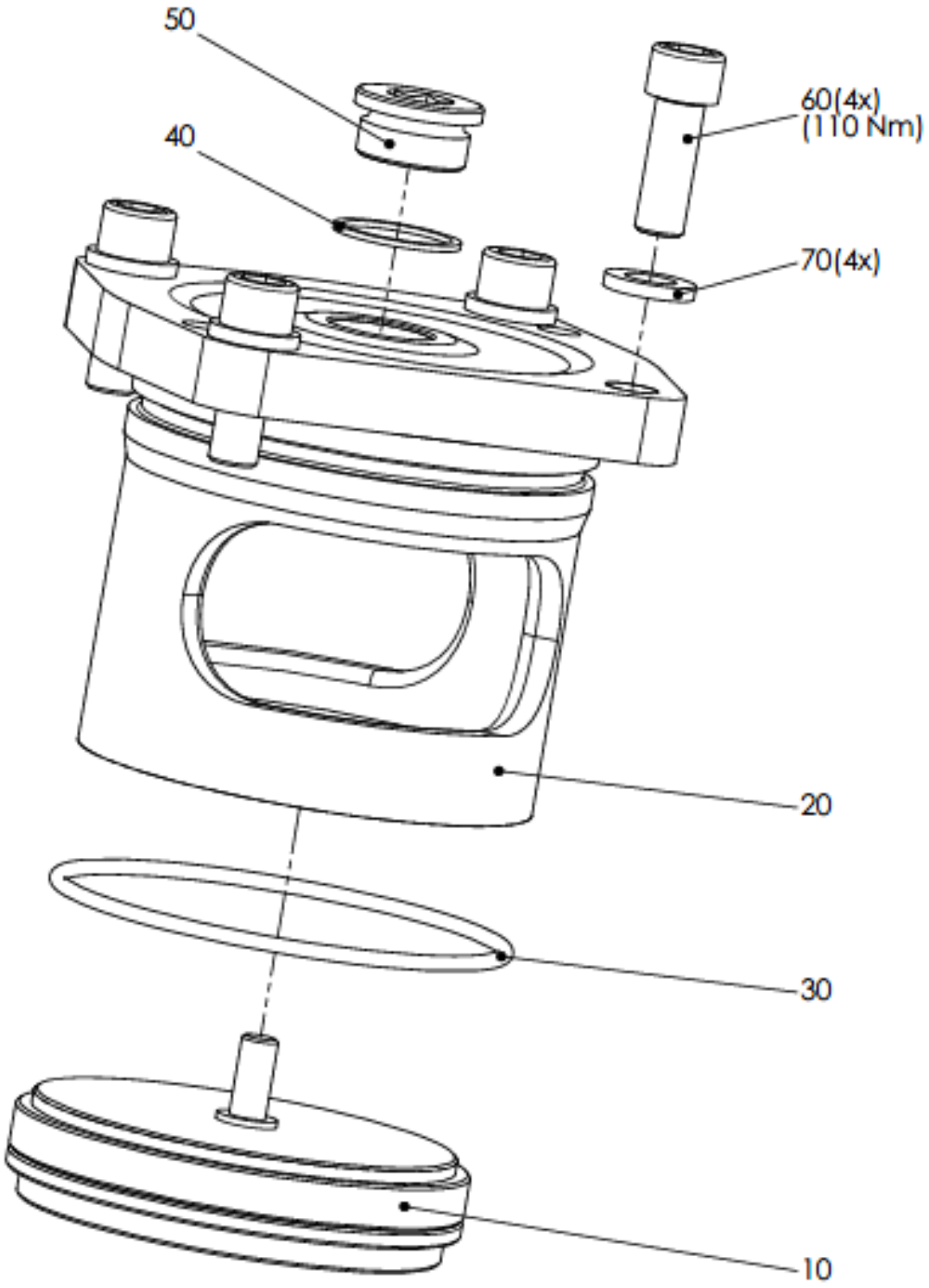

ITEM TAG NO.	PART NO.	DESCRIPTION	QTY
		Drawing CC0811 Delivery valve fastening	
10	17811-CC0961	see 1.assy Pos. 30.2 resp. 30	1
20	17811-CC0962	Valve lantern	1
30	17811-CC0963	O-ring	1
40	17811-CC0964	Sealing ring	1
50	17811-CC0965	Screw plug	1
60	17811-CC0966	Hexagon socket h.c. screw	4
70	17811-CC0967	Lock plate	4

Drawing CC0812 Delivery valve fastening

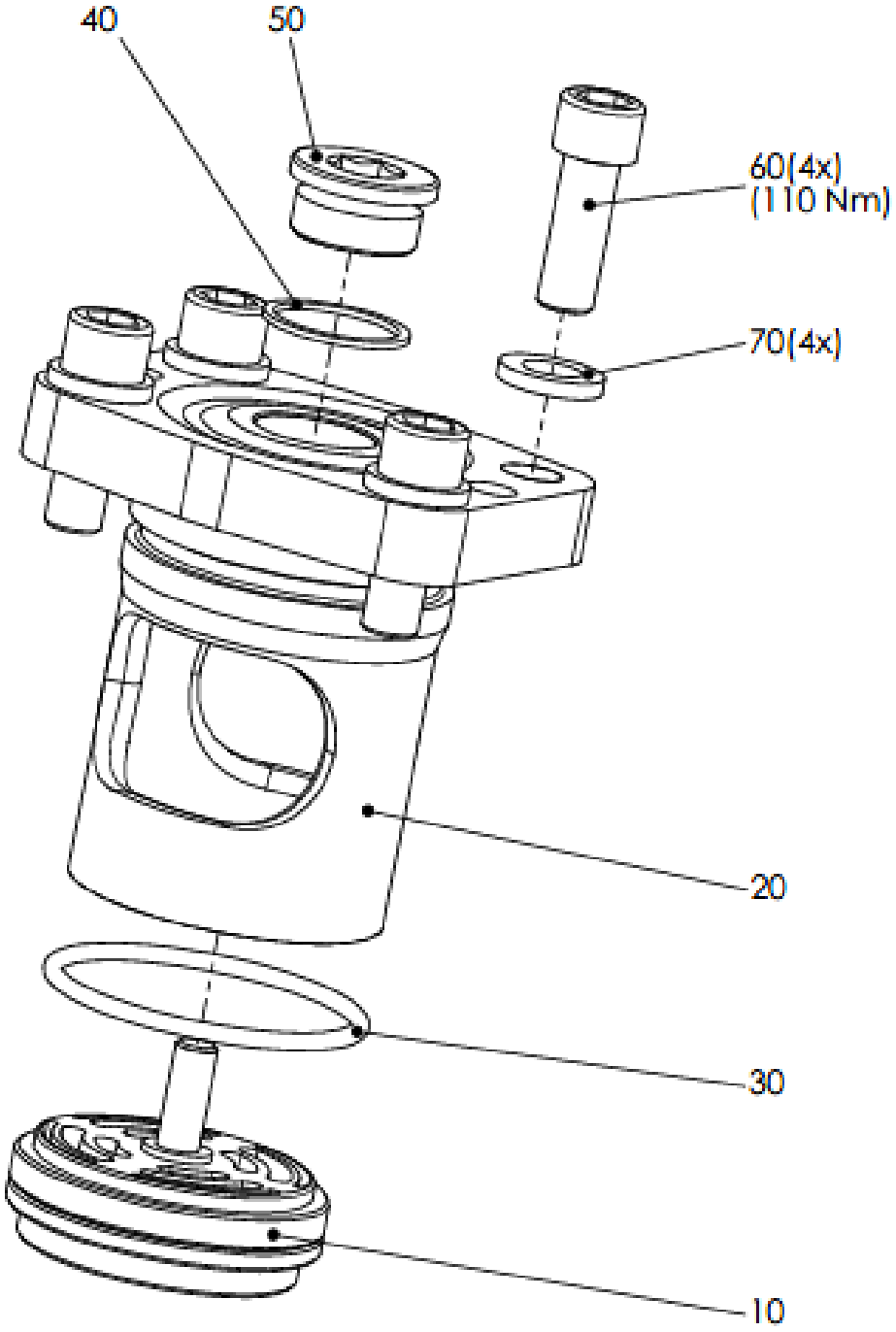

ITEM TAG NO.	PART NO.	DESCRIPTION	QTY
		Drawing CC0812 Delivery valve fastening	
10	17811-CC0968	see 1.assy Pos.30.4 resp. 30	1
20	17811-CC0969	Valve lantern	1
30	17811-CC0970	O-ring	1
40	17811-CC0971	Sealing ring	1
50	17811-CC0972	Screw plug	1
60	17811-CC0973	Hexagon socket h.c. screw	4
70	17811-CC0974	Lock plate	4

Drawing CC0813 Condensate drain

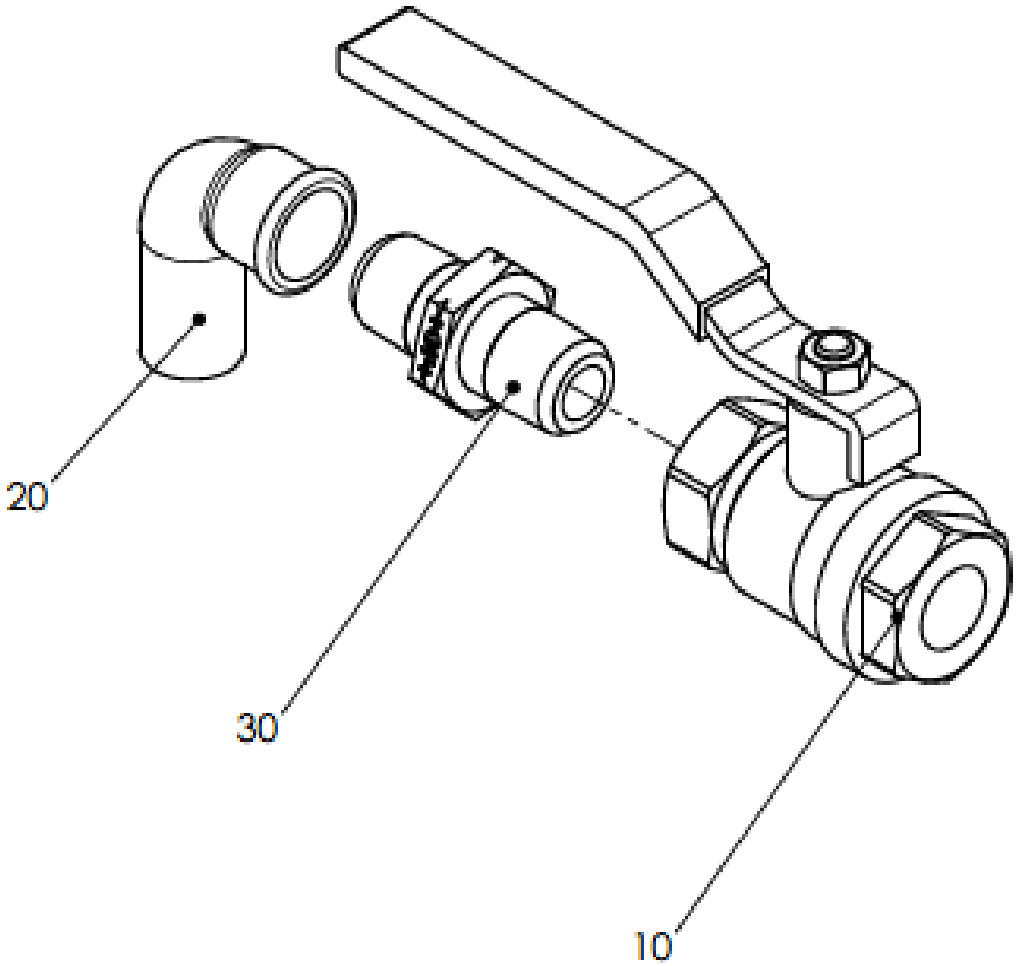

ITEM TAG NO.	PART NO.	DESCRIPTION	QTY
		Drawing CC0813 Condensate drain	
10	17811-CC0975	Ball valve	1
20	17811-CC0976	Angle	1
30	17811-CC0977	Double nipple	1

Drawing CC0814 Piston and guide rings assembly

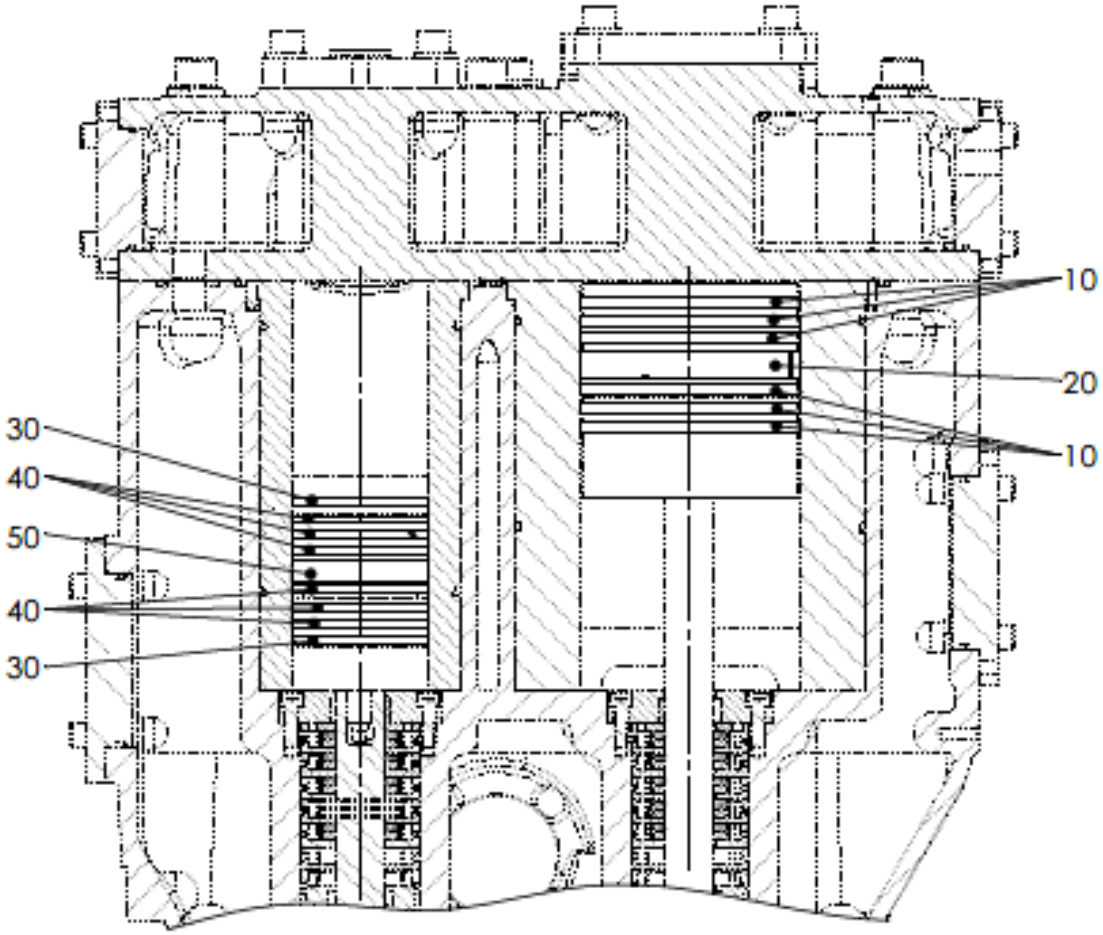

ITEM TAG NO.	PART NO.	DESCRIPTION	QTY
		Drawing CC0814 Piston and guide rings assembly	
10	17811-CC0978	Piston ring	6
20	17811-CC0979	Guide ring	1
30	17811-CC0980	Piston ring	2
40	17811-CC0981	Piston ring	6
50	17811-CC0982	Guide ring	1

Drawing CC0815 Working valves (assembly)

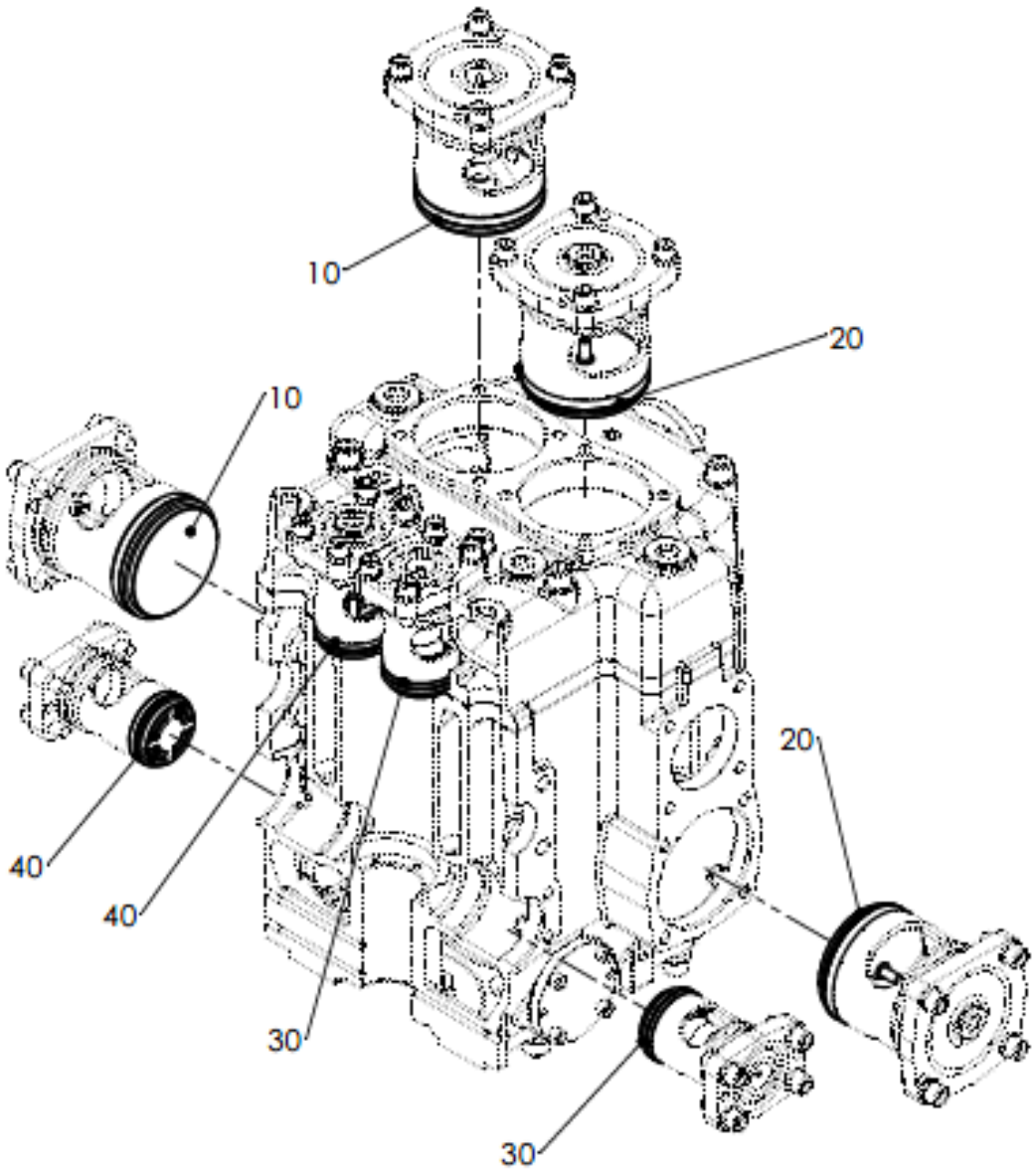

ITEM TAG NO.	PART NO.	DESCRIPTION	QTY
		Drawing CC0815 Working valves (assembly)	
10	17811-CC0983	Suction valve	2
20	17811-CC0984	Delivery valve	2
30	17811-CC0985	Suction valve	2
40	17811-CC0986	Delivery valve	2

Drawing CC0816 Piston assembly

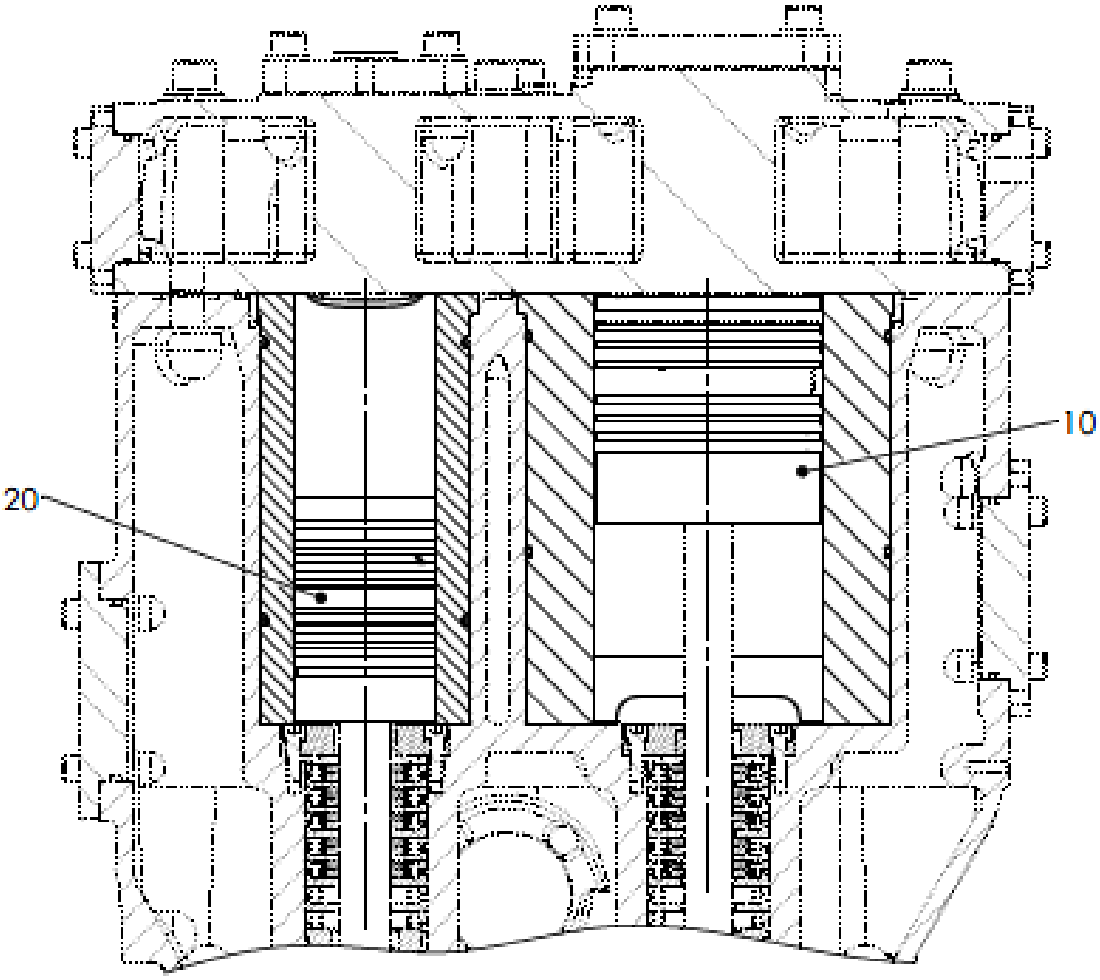

ITEM TAG NO.	PART NO.	DESCRIPTION	QTY
		Drawing CC0816 Piston assembly	
10	17811-CC0987	Piston	1
20	17811-CC0988	Piston	1

Drawing CC0817 Piston

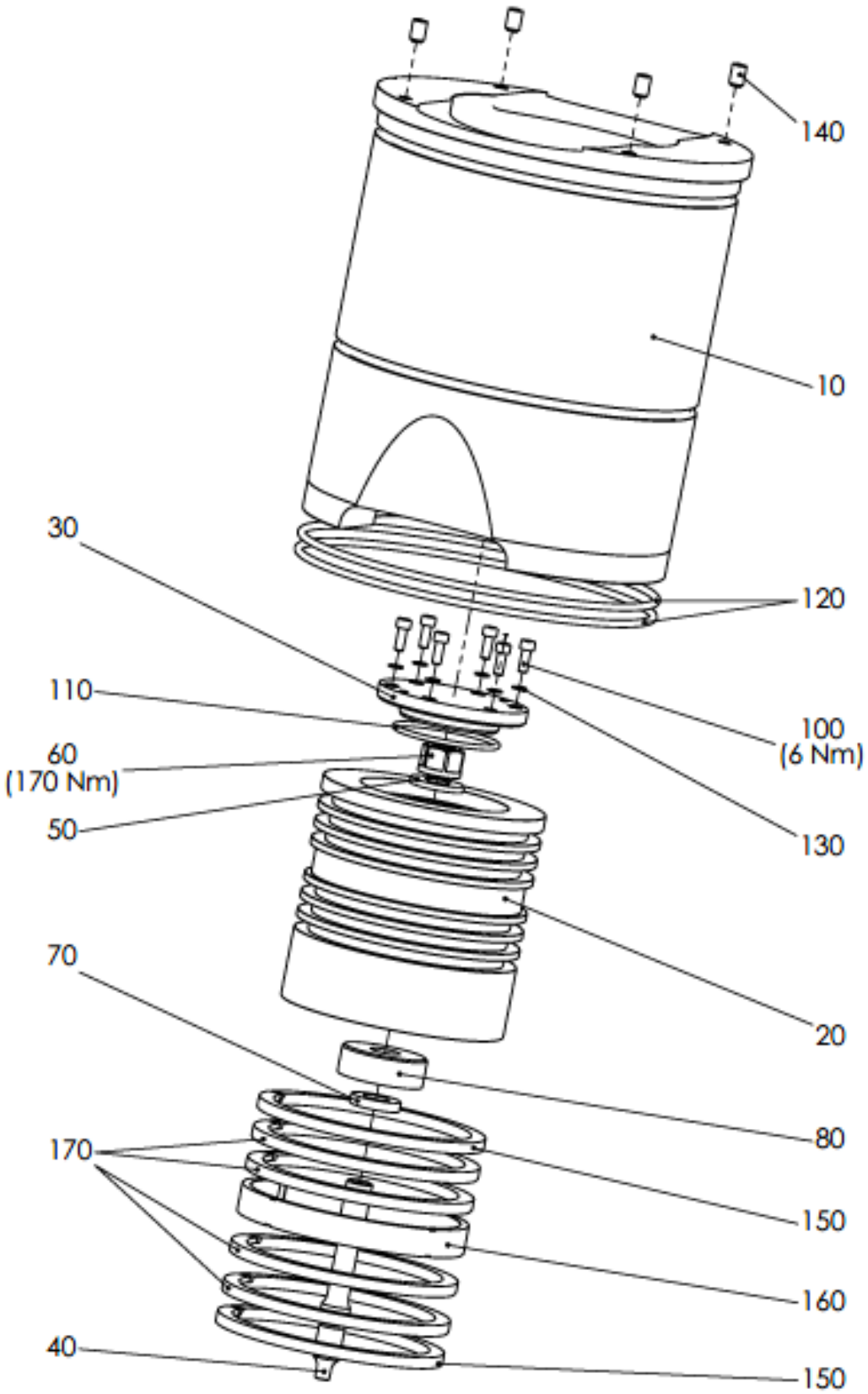

ITEM TAG NO.	PART NO.	DESCRIPTION	QTY
		Drawing CC0817 Piston	
10	17811-CC0989	Cylinder liner	1
20	17811-CC0990	Piston	1
30	17811-CC0991	Piston cover	1
40	17811-CC0992	Screw	1
50	17811-CC0993	Pressure washer	1
60	17811-CC0994	Nut	1
70	17811-CC0995	Pressure washer	1
80	17811-CC0996	Pressure washer	1
100	17811-CC0997	Hexagon socket h.c. screw	6
110	17811-CC0998	O-ring	1
120	17811-CC0999	O-ring	2
130	17811-CC1000	Lock plate	6
140	17811-CC1001	Set screw	4
150	17811-CC1002	see 1.assy Pos.20.1 resp. 20	2
160	17811-CC1003	see 1.assy Pos.20.2 resp. 20	1
170	17811-CC1004	see 1.assy Pos.20.3 resp. 20	4

Drawing CC0818 Piston

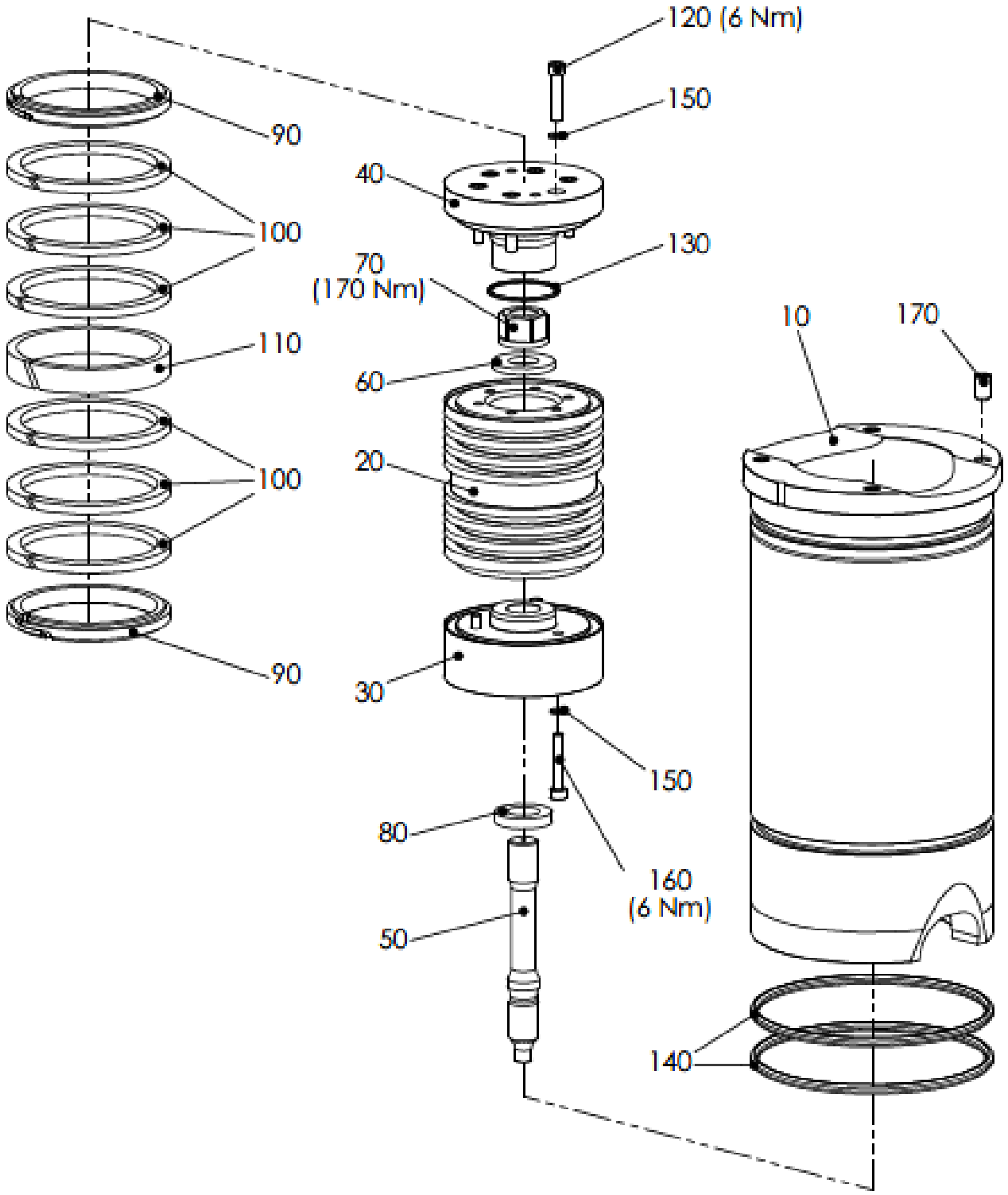

ITEM TAG NO.	PART NO.	DESCRIPTION	QTY
		Drawing CC0818 Piston	
10	17811-CC1005	Cylinder liner	1
20	17811-CC1006	Piston top	1
30	17811-CC1007	Piston lower part	1
40	17811-CC1008	Piston cover	1
50	17811-CC1009	Screw	1
60	17811-CC1010	Pressure washer	1
70	17811-CC1011	Nut	1
80	17811-CC1012	Pressure washer	1
90	17811-CC1013	see 1.assy Pos.20.1 resp. 20	2
100	17811-CC1014	see 1.assy Pos.20.3 resp. 20	6
110	17811-CC1015	see 1.assy Pos.20.2 resp. 20	1
120	17811-CC1016	Hexagon socket h.c. screw	6
130	17811-CC1017	O-ring	1
140	17811-CC1018	O-ring	2
150	17811-CC1019	Lock plate	9
160	17811-CC1020	Hexagon socket h.c. screw	3
170	17811-CC1021	Set screw	4

Drawing CC0819 Gland gas

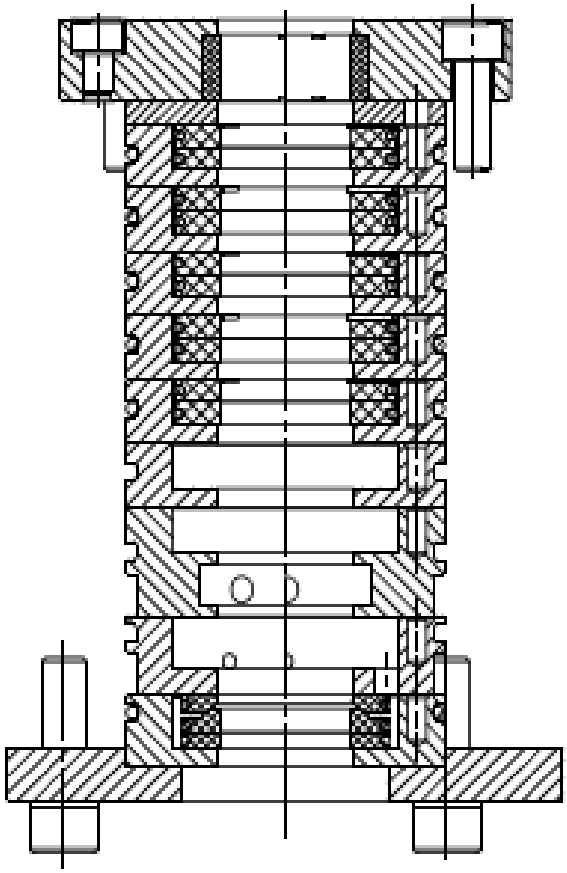

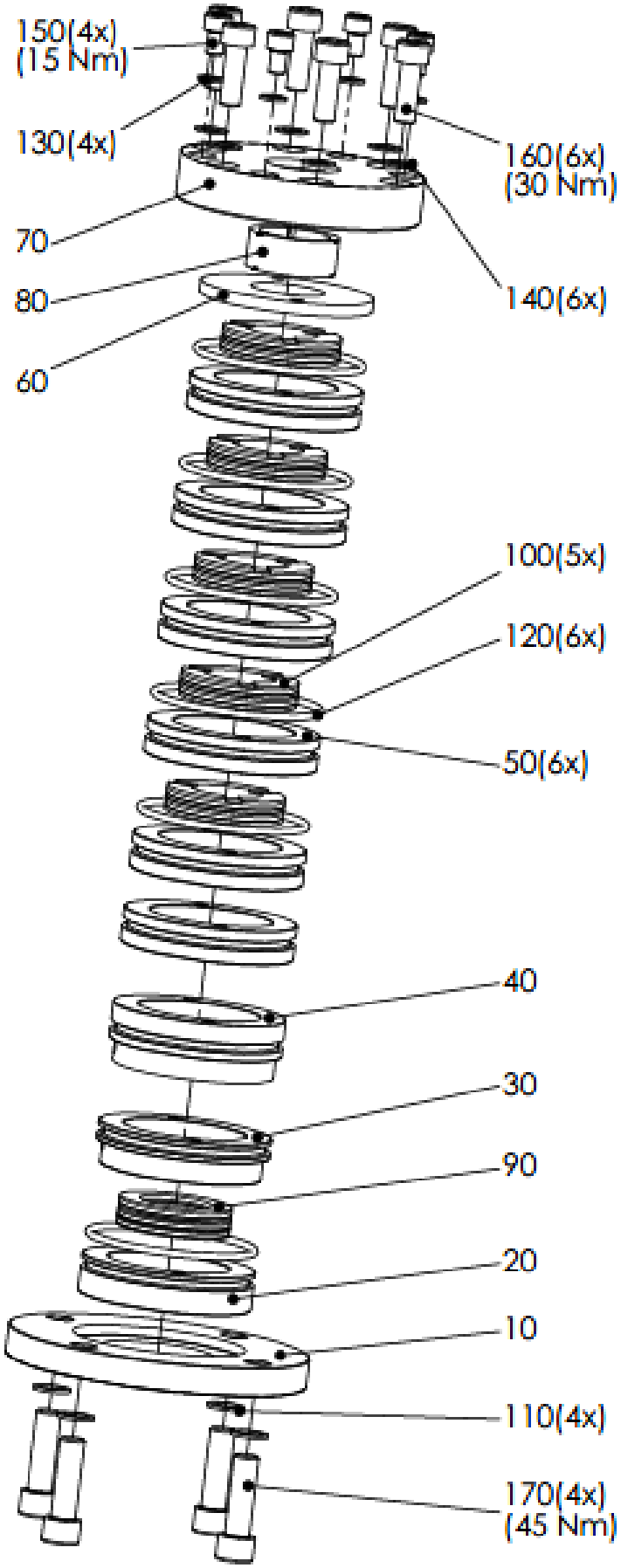

ITEM	***PART NO.***	***DESCRIPTION***	***QTY***
TAG NO.			
		Drawing CC0819 Gland gas	
10	17811-CC1022	Gland cover	1
20	17811-CC1023	Gland chamber	1
30	17811-CC1024	Gland chamber	1
40	17811-CC1025	Leak gas ring	1
50	17811-CC1026	Gland chamber	6
60	17811-CC1027	Washer	1
70	17811-CC1028	Gland cover	1
80	17811-CC1029	Guide ring	1
90	17811-CC1030	Segmental Ring	1
100	17811-CC1031	Segmental Ring	5
110	17811-CC1032	Lock plate	4
120	17811-CC1033	O-ring	6
130	17811-CC1034	Lock plate	4
140	17811-CC1035	Lock plate	6
150	17811-CC1036	Hexagon socket h.c. screw	4
160	17811-CC1037	Hexagon socket h.c. screw	6
170	17811-CC1038	Hexagon socket h.c. screw	4

Drawing CC0820 Valve control assembly

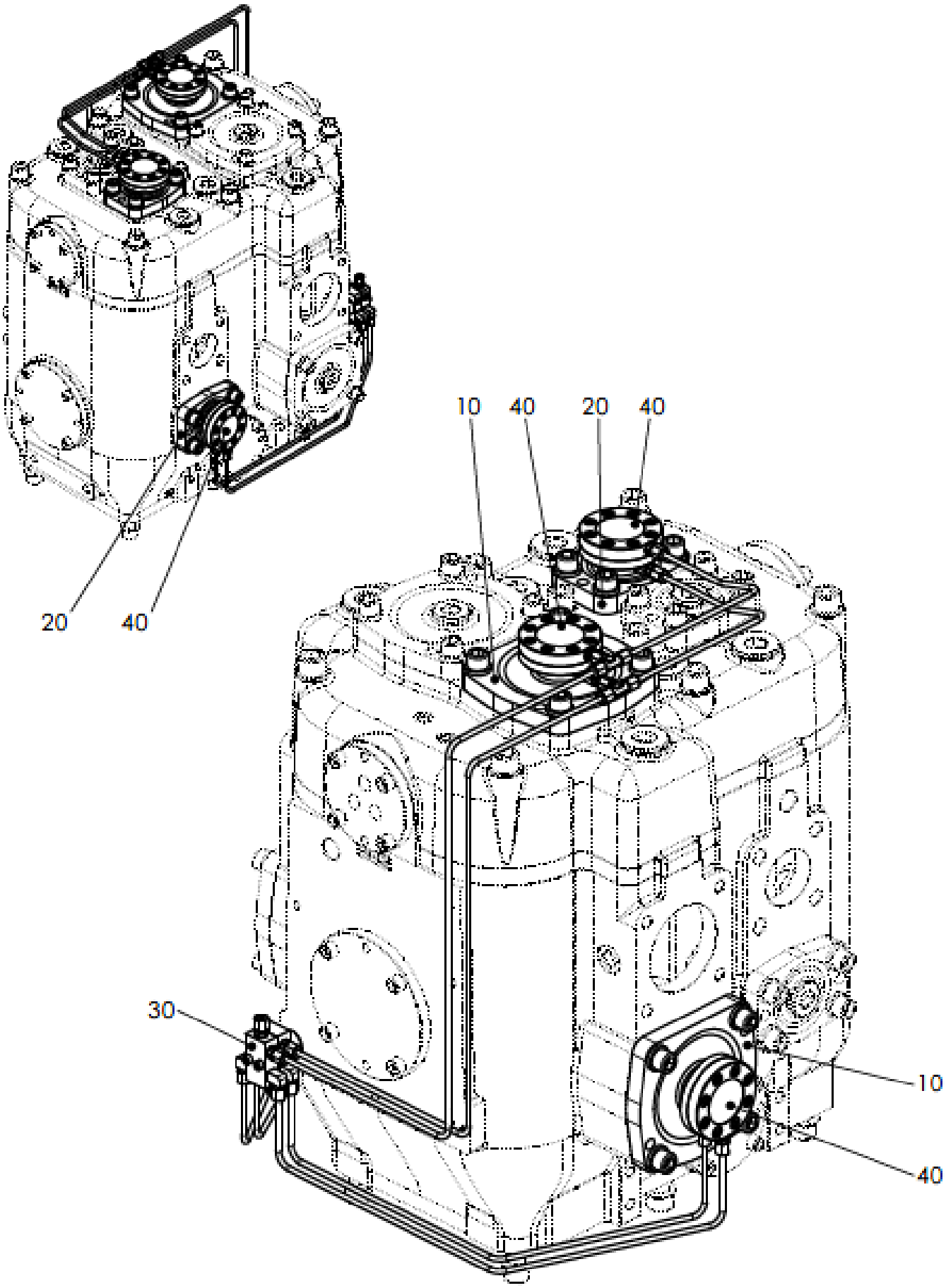

ITEM TAG NO.	PART NO.	DESCRIPTION	QTY
		Drawing CC0820 Valve control assembly	
10	17811-CC1039	Valve control	2
20	17811-CC1040	Valve control	2
30	17811-CC1041	Piping - valve control	1
40	17811-CC1042	Control unit	4
50	17811-CC1043	Plate	1
60	17811-CC1044	Plate	1

Drawing CC0821 Valve control

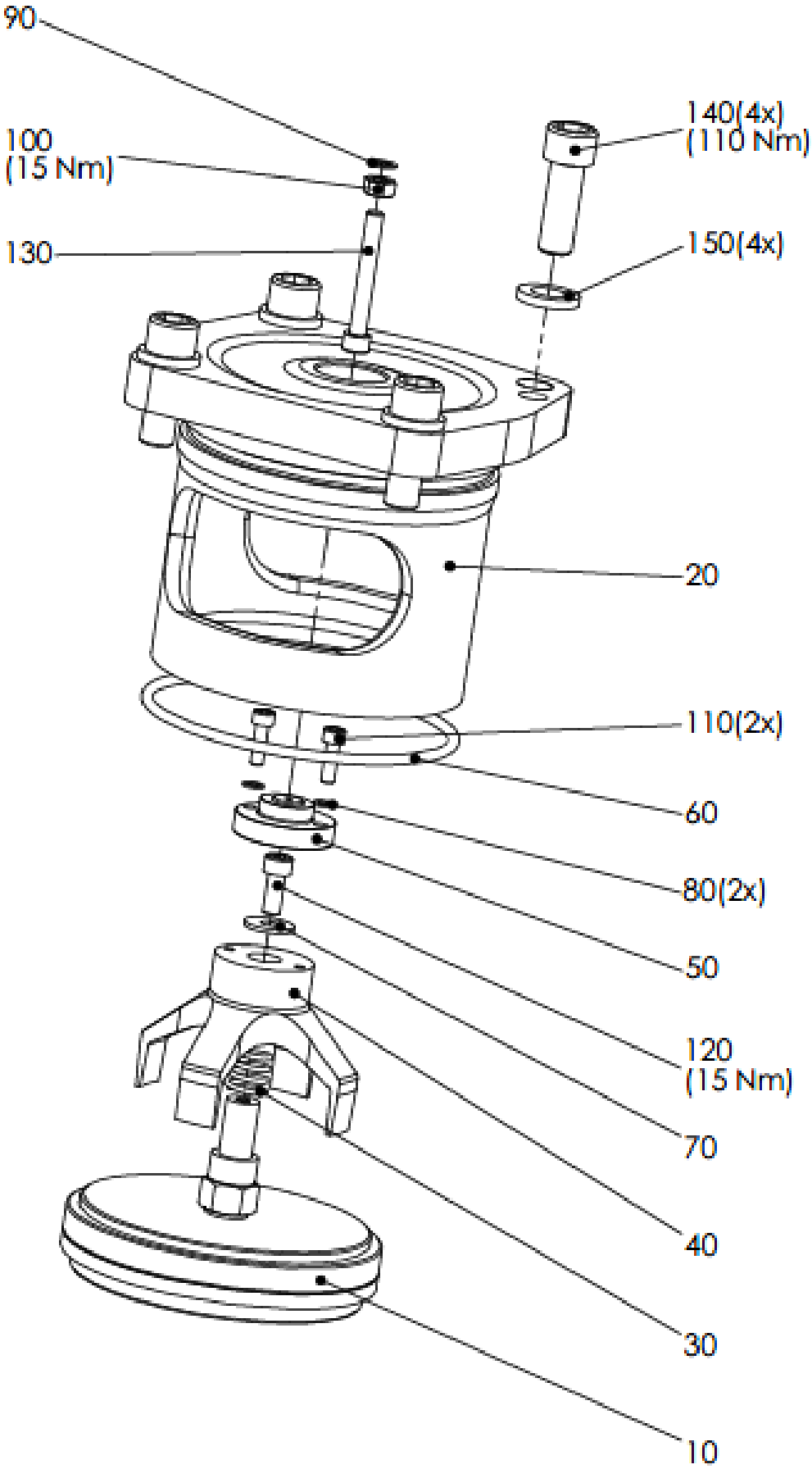

ITEM TAG NO.	PART NO.	DESCRIPTION	QTY
		Drawing CC0821 Valve control	
10	17811-CC1045	see 1.assy Pos 30.1 resp. 30	1
20	17811-CC1046	Valve lantern	1
30	17811-CC1047	Pressure spring	1
40	17811-CC1048	Unloader fork	1
50	17811-CC1049	Pressure piece	1
60	17811-CC1050	O-ring	1
70	17811-CC1051	Washer	1
80	17811-CC1052	Lock plate	2
90	17811-CC1053	Lock plate	1
100	17811-CC1054	Hexagon nut	1
110	17811-CC1055	Hexagon socket h.c. screw	2
120	17811-CC1056	Hexagon socket h.c. screw	1
130	17811-CC1057	Hexagon socket h.c. screw	1
140	17811-CC1058	Hexagon socket h.c. screw	4
150	17811-CC1059	Lock plate	4

Drawing CC0822 Valve control

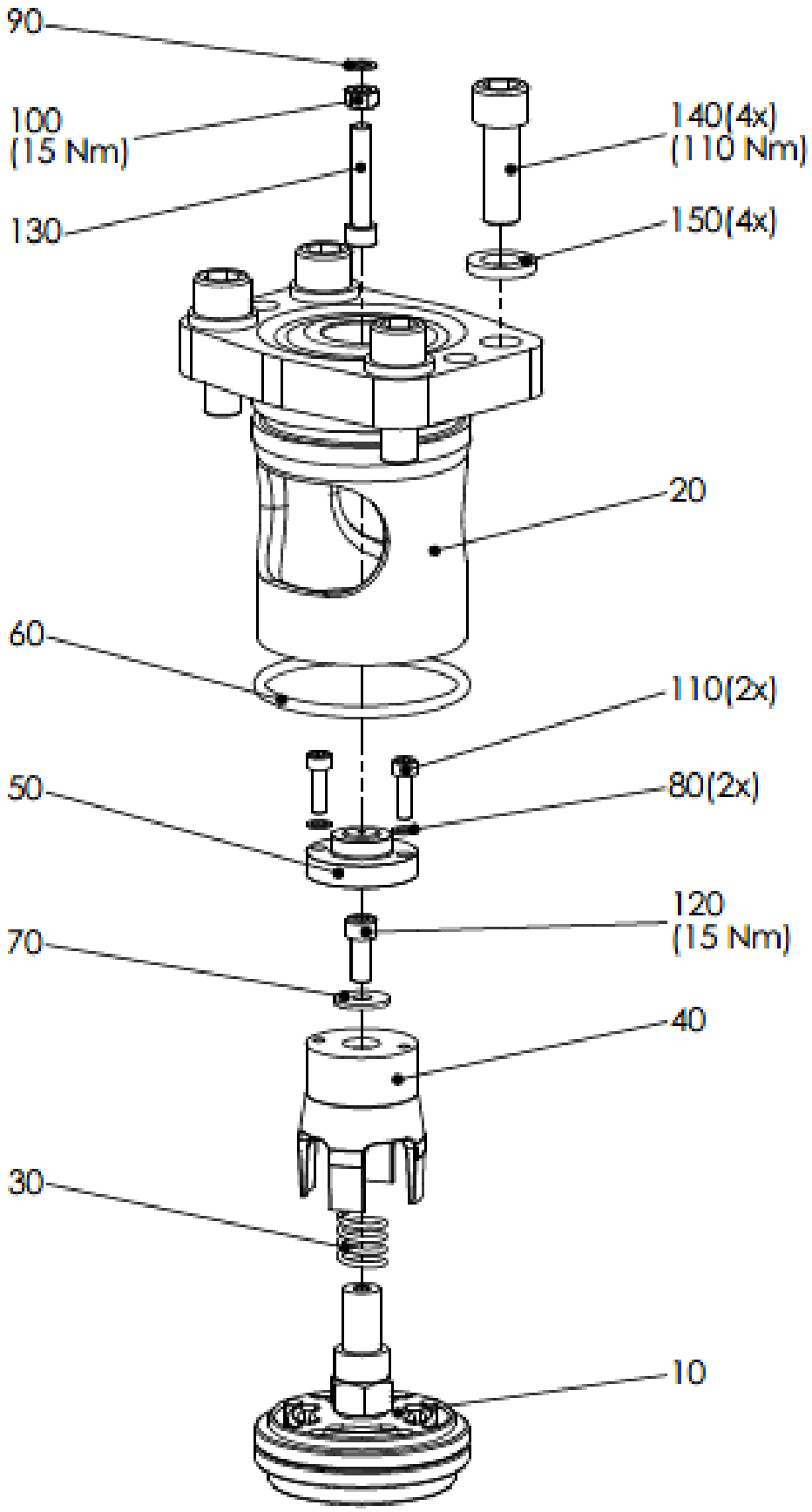

ITEM TAG NO.	PART NO.	DESCRIPTION	QTY
		Drawing CC0822 Valve control	
10	17811-CC1060	see 1.assy Pos.30.3 resp. 30	1
20	17811-CC1061	Valve lantern	1
30	17811-CC1062	Pressure spring	1
40	17811-CC1063	Unloader fork	1
50	17811-CC1064	Pressure piece	1
60	17811-CC1065	O-ring	1
70	17811-CC1066	Washer	1
80	17811-CC1067	Lock plate	2
90	17811-CC1068	Lock plate	1
100	17811-CC1069	Hexagon nut	1
110	17811-CC1070	Hexagon socket h.c. screw	2
120	17811-CC1071	Hexagon socket h.c. screw	1
130	17811-CC1072	Hexagon socket h.c. screw	1
140	17811-CC1073	Hexagon socket h.c. screw	4
150	17811-CC1074	Lock plate	4

Drawing CC0823 Piping valve control

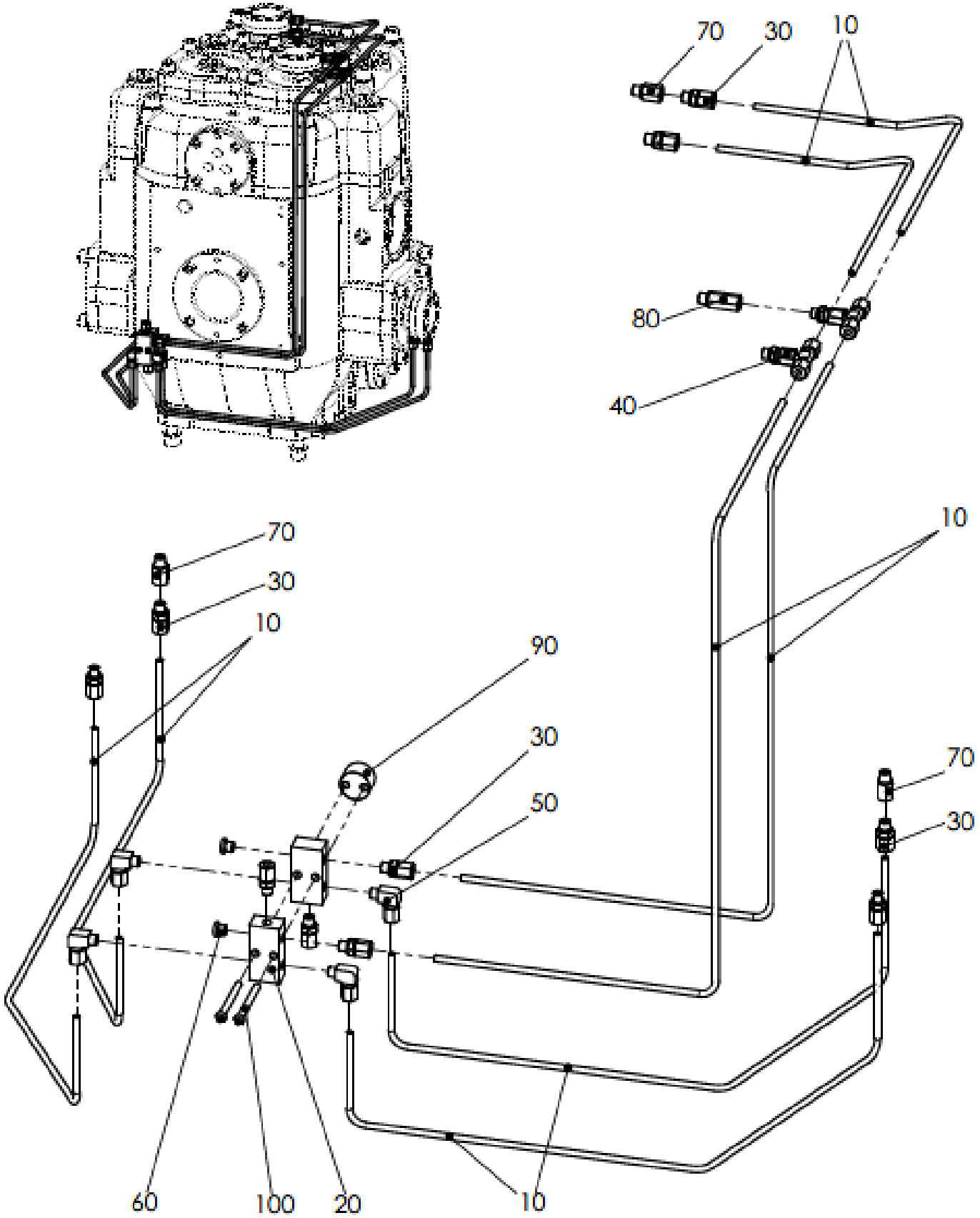

ITEM	***PART NO.***	***DESCRIPTION***	***QTY***
TAG NO.			
		Drawing CC0823 Piping valve control	
10	17811-CC1075	Tube	5,9
20	17811-CC1076	Distributor	2
30	17811-CC1077	Threaded joint	10
40	17811-CC1078	T-Screw connection	2
50	17811-CC1079	Angular threaded joint	4
60	17811-CC1080	Screw plug	2
70	17811-CC1081	Screwing socket	3
80	17811-CC1082	Screwing socket	1
90	17811-CC1083	Adaptor	1
100	17811-CC1084	Hexagon socket h.c. screw	2

Drawing CC0824 Control unit

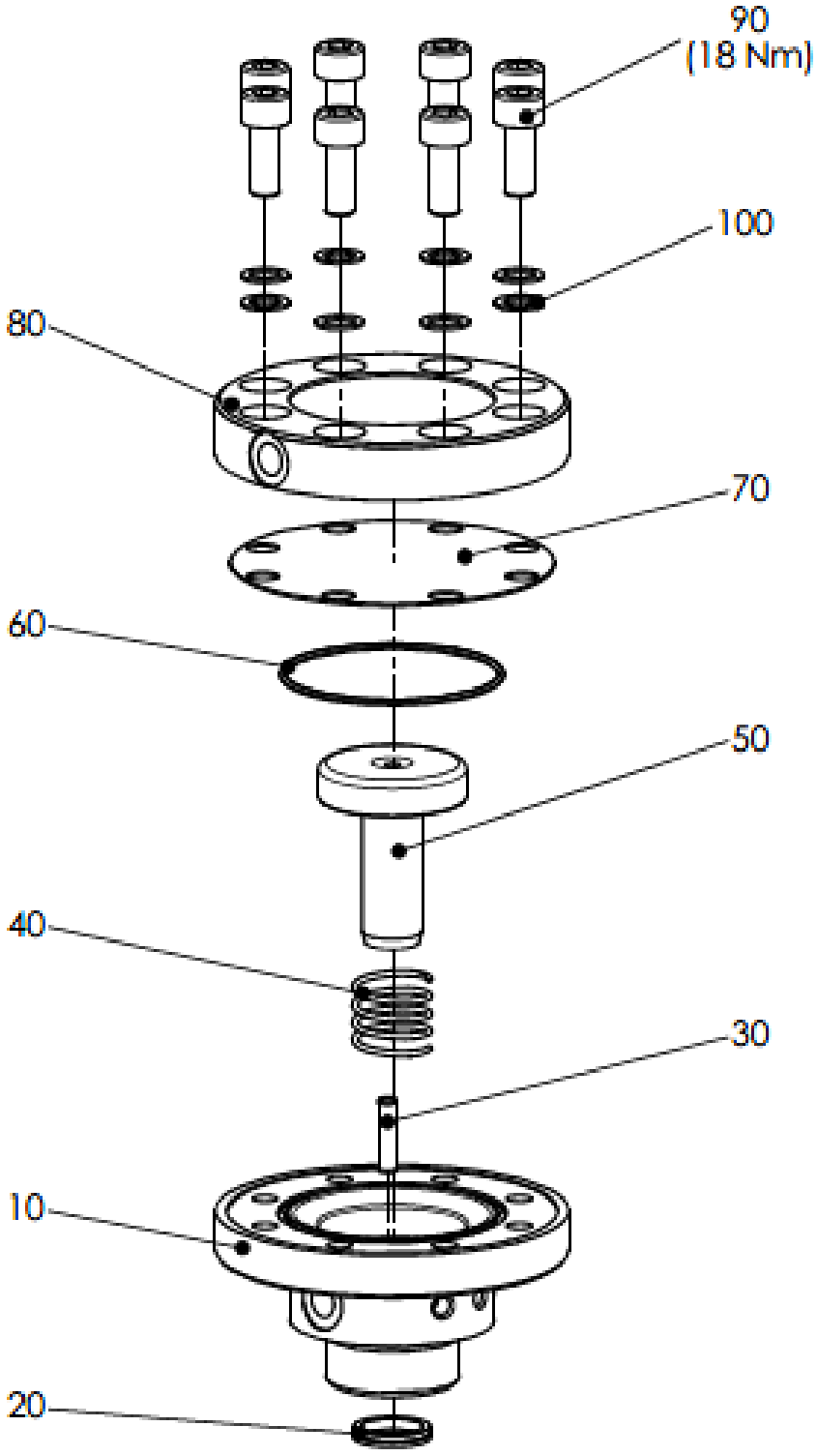

ITEM TAG NO.	PART NO.	DESCRIPTION	QTY
		Drawing CC0824 Control unit	
10	17811-CC1085	Cylinder	1
20	17811-CC1086	Slotted ring	1
30	17811-CC1087	Straight pin	1
40	17811-CC1088	Pressure spring	1
50	17811-CC1089	Piston	1
60	17811-CC1090	O-ring	1
70	17811-CC1091	Diaphragm	1
80	17811-CC1092	Cover	1
90	17811-CC1093	Hexagon socket h.c. screw	8
100	17811-CC1094	Lock plate	8

Drawing CC0825 Leak gas - Gland

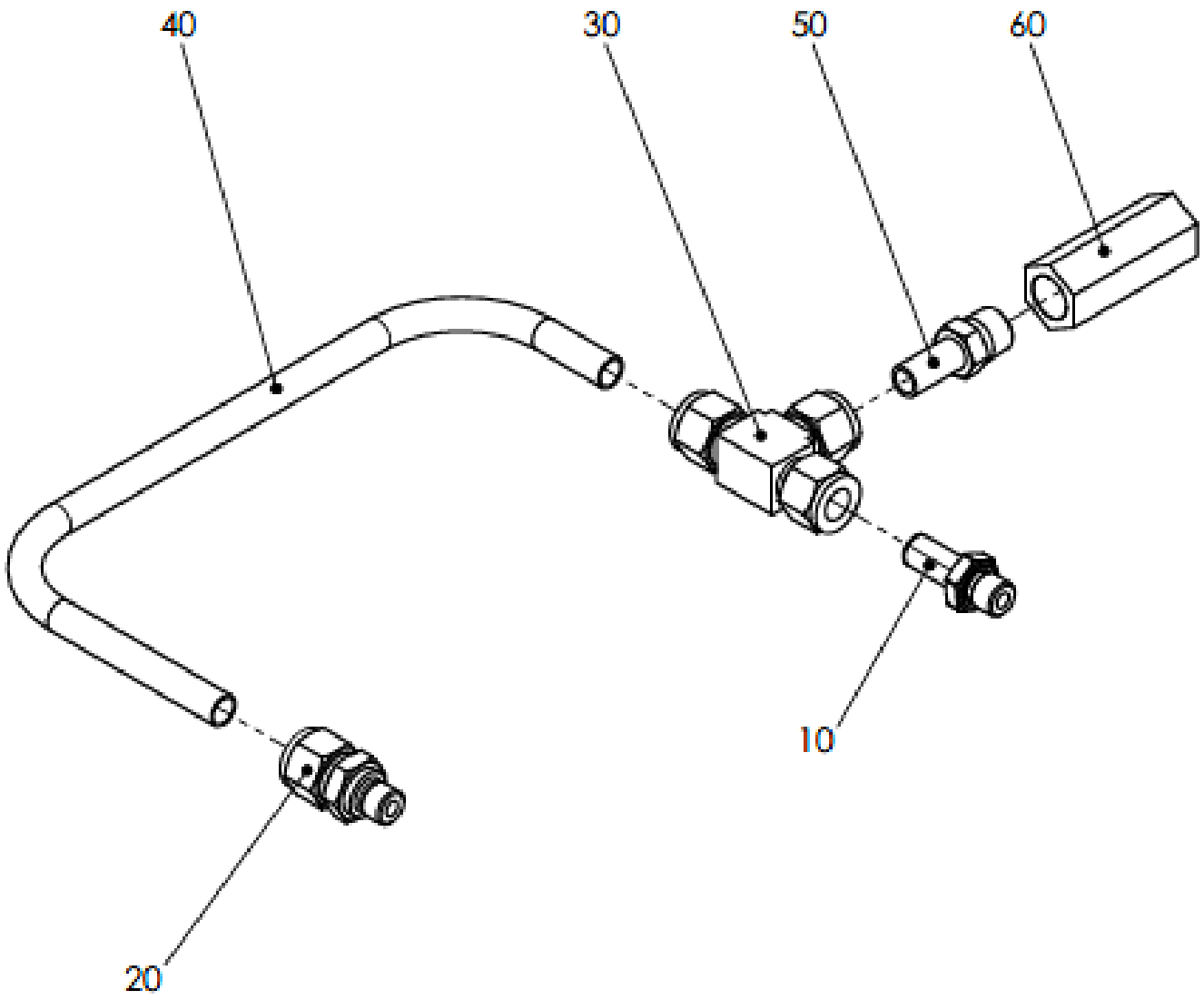

ITEM TAG NO.	PART NO.	DESCRIPTION	QTY
		Drawing CC0825 Leak gas - Gland	
10	17811-CC1095	Tube adapter	1
20	17811-CC1096	Straight connection	1
30	17811-CC1097	T-threaded joint	1
40	17811-CC1098	Pipeline	1
50	17811-CC1099	Tube adapter	1
60	17811-CC1100	Non-return valve	1

Drawing CC0826 Leak gas - Latern

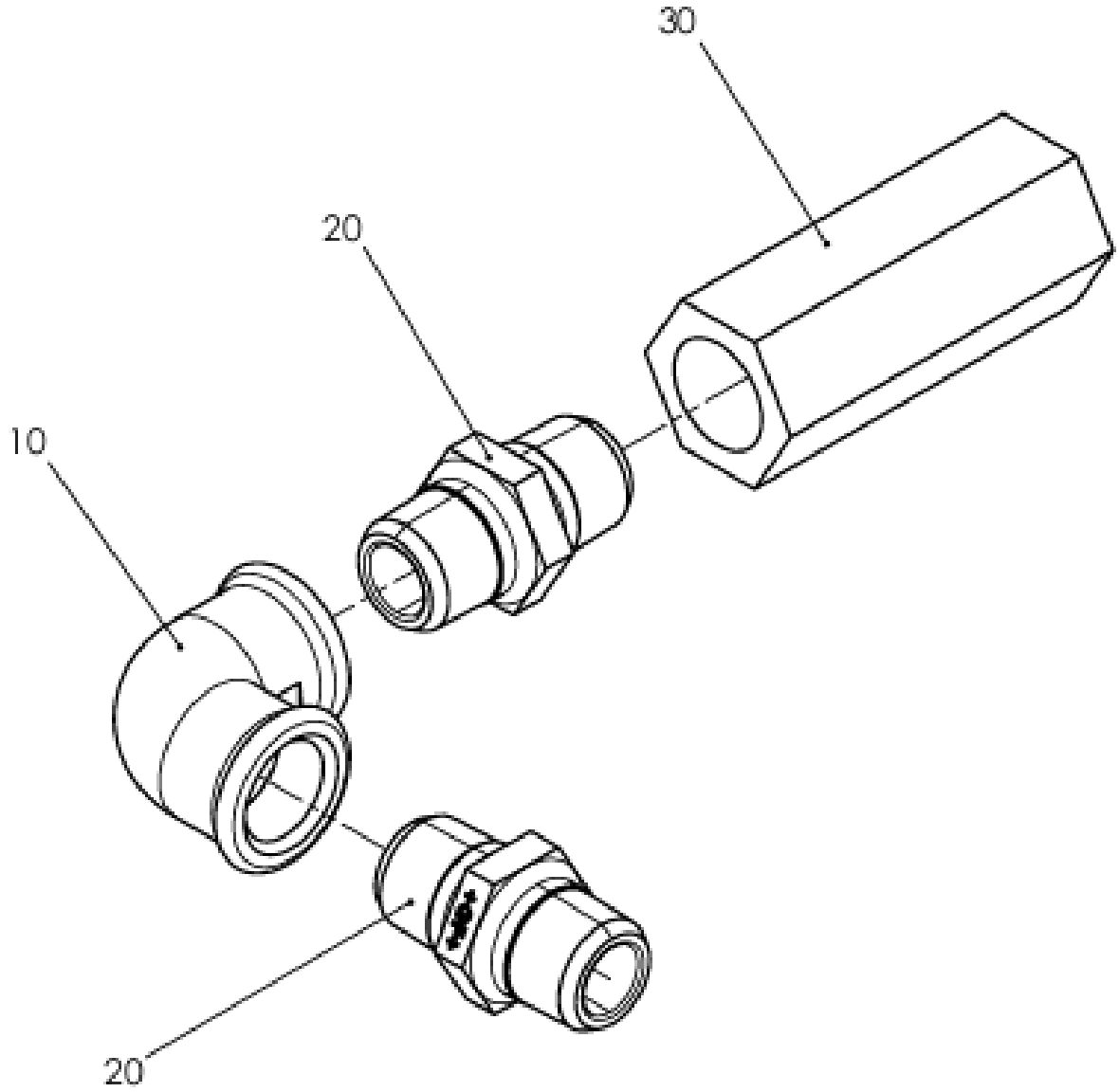

ITEM TAG NO.	PART NO.	DESCRIPTION	QTY
		Drawing CC0826 Leak gas - Latern	
10	17811-CC1101	Angle	1
20	17811-CC1102	Double nipple	2
30	17811-CC1103	Non-return valve	1

Drawing CC0827 Without purging gas

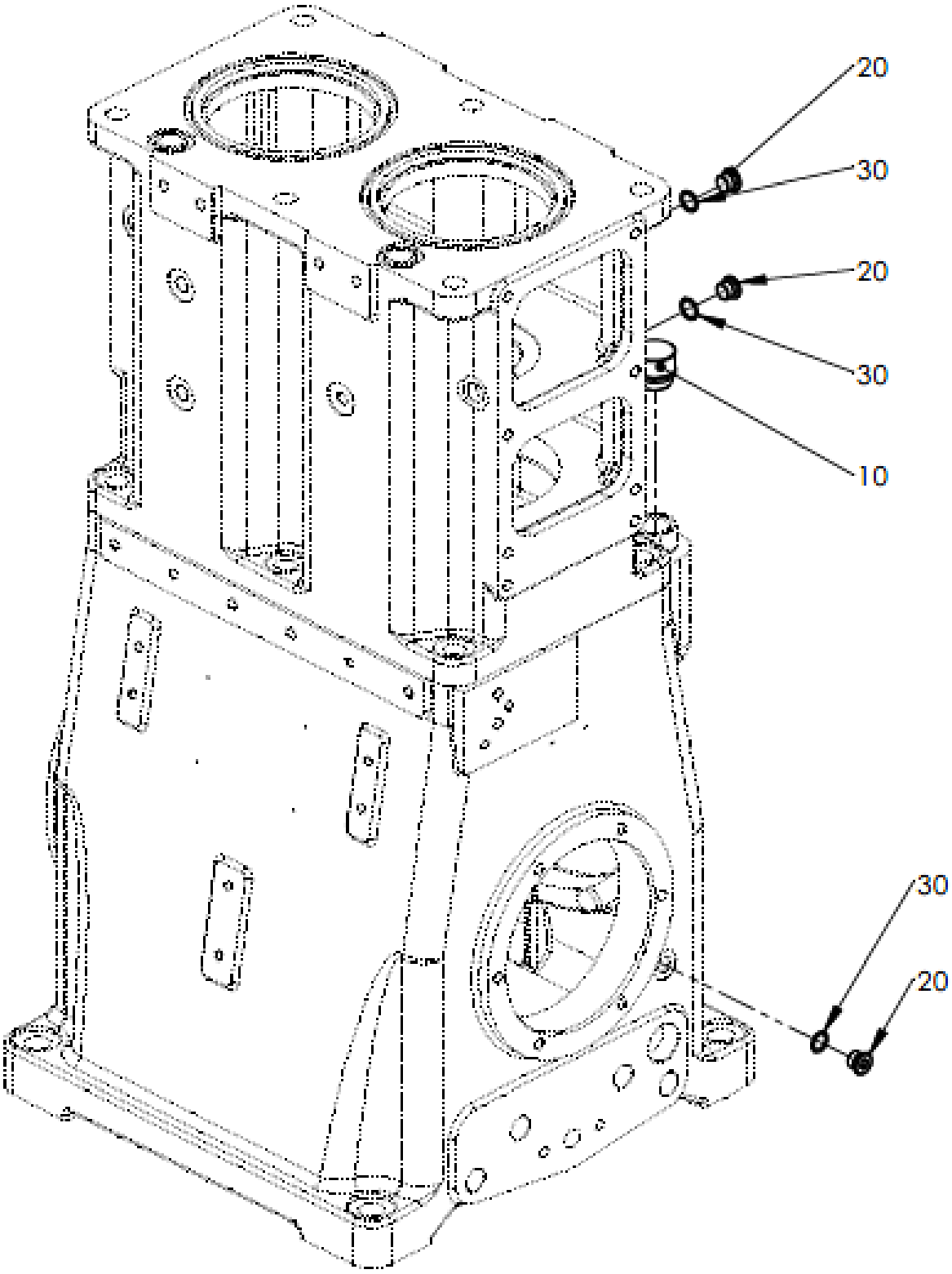

ITEM TAG NO.	PART NO.	DESCRIPTION	QTY
		Drawing CC0827 Without purging gas	
10	17811-CC1104	Vent screw	1
20	17811-CC1105	Screw plug	3
30	17811-CC1106	Sealing ring	3

Drawing CC0828 Cooling water connection

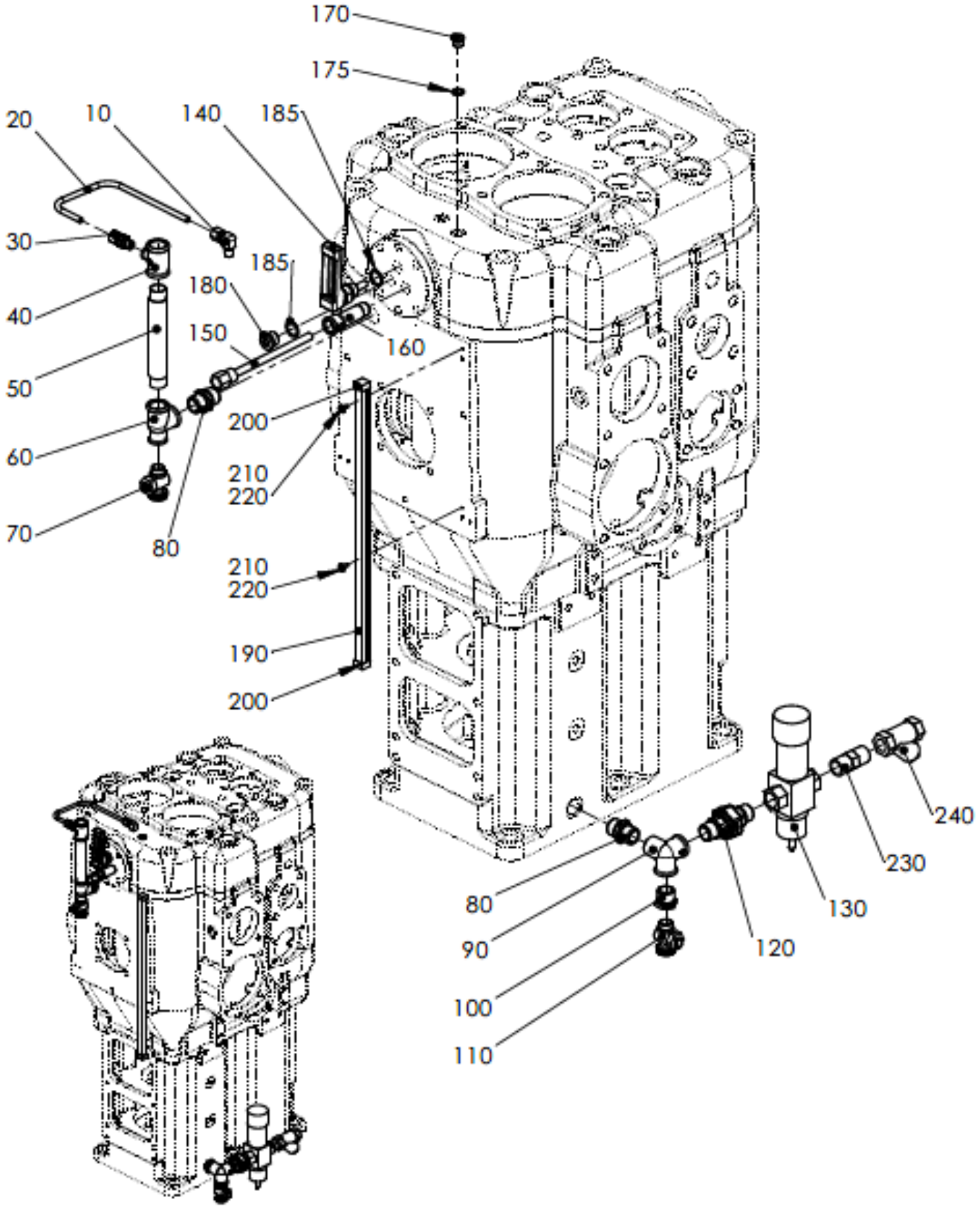

ITEM TAG NO.	PART NO.	DESCRIPTION	QTY
		Drawing CC0828 Cooling water connection	
10	17811-CC1107	Angular threaded joint	1
20	17811-CC1108	Pipeline	1
30	17811-CC1109	Threaded joint	1
40	17811-CC1110	T-Piece	1
50	17811-CC1111	Nipple	1
60	17811-CC1112	T-Piece	1
70	17811-CC1113	Drain valve	1
80	17811-CC1114	Double nipple	2
90	17811-CC1115	Elbow distributor	1
100	17811-CC1116	Reduction nipple	1
110	17811-CC1117	Drain valve	1
120	17811-CC1118	Threaded joint	1
130	17811-CC1119	Thermostatic valve	1
140	17811-CC1120	Thermometer	1
150	17811-CC1121	Protective tube	1
160	17811-CC1122	Extension tube	1
170	17811-CC1123	Screw plug	1
170,1	17811-CC1124	Sealing ring	1
180	17811-CC1125	Plug	1
185	17811-CC1126	Sealing ring	2
190	17811-CC1127	Cable channel	0,5
200	17811-CC1128	Guard ring	2
210	17811-CC1129	Washer	2
220	17811-CC1130	Hexagon socket h.c. screw	2
230	17811-CC1131	Nipple	1
240	17811-CC1132	Strainer	1

Drawing CC0829 Suction Valve

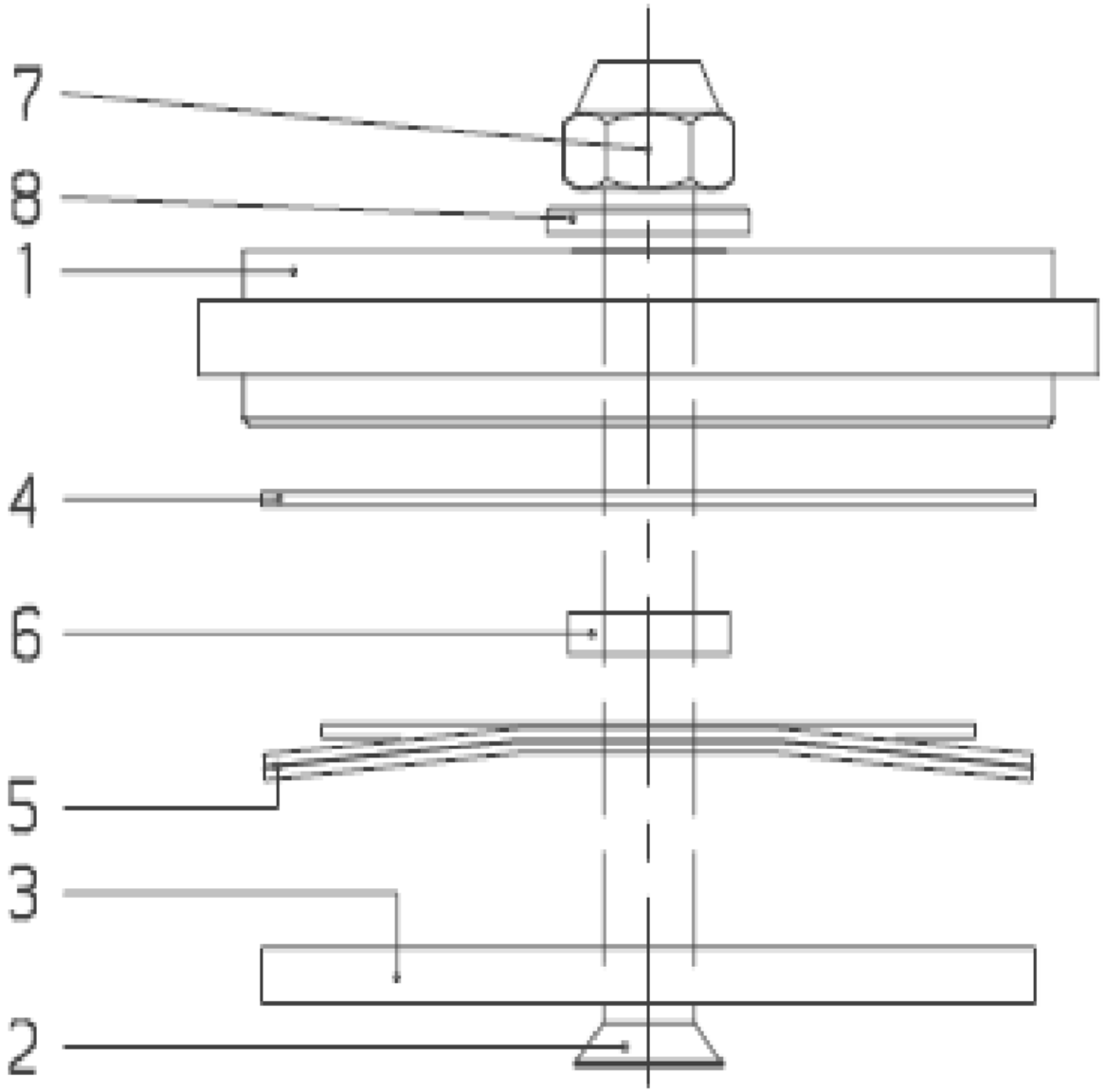

ITEM TAG NO.	***PART NO.***	***DESCRIPTION***	***QTY***
		Drawing CC0829 Suction valve	
7	17811-CC1133	Castle nut	1
8	17811-CC1134	Washer	1
1	17811-CC1135	Valve seat	1
4	17811-CC1136	Valve plate	1
6	17811-CC1137	Lift washer	1
5	17811-CC1138	Spring plate	1
3	17811-CC1139	Buffle plate	1
2	17811-CC1140	Central screw	1

Drawing CC0830 Delivery Valve

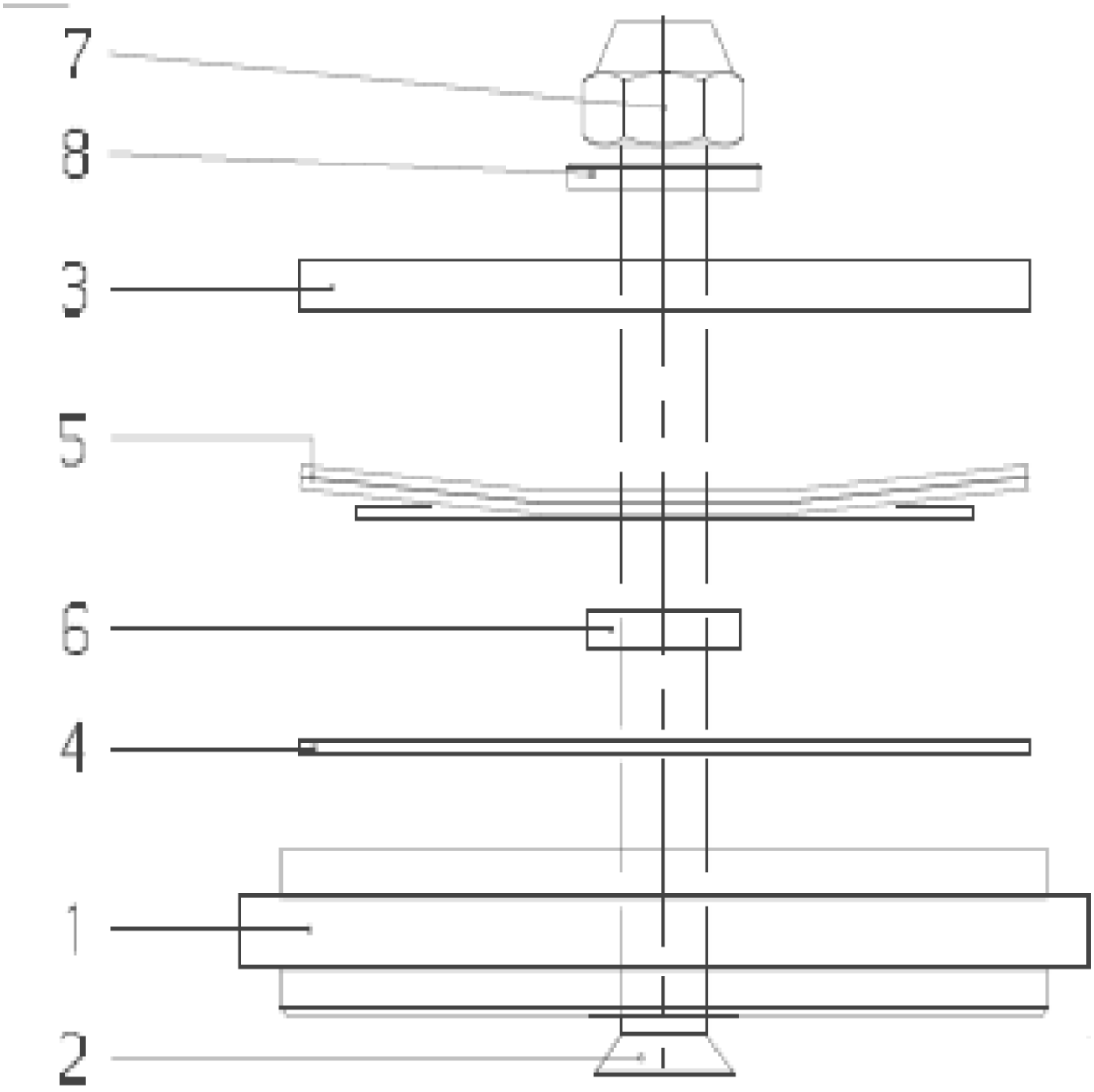

ITEM TAG NO.	***PART NO.***	***DESCRIPTION***	***QTY***
		Drawing CC0830 Delivery valve	
7	17811-CC1141	Castle nut	1
8	17811-CC1142	Washer	1
3	17811-CC1143	Buffle plate	1
5	17811-CC1144	Spring plate	2
6	17811-CC1145	Lift washer	1
4	17811-CC1146	Valve plate	1
1	17811-CC1147	Valve seat	1
2	17811-CC1148	Central screw	1